		PAGINA Page Seite
MODULO MOTORIZZATO RADIALE Radial driven tool Radial angetriebenes Werkzeug	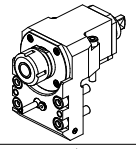	CMZ010.1.00
MODULO MOTORIZZATO ASSIALE H=37.5mm Axial driven tool H=37.5mm Axial angetriebenes Werkzeug H=37.5mm	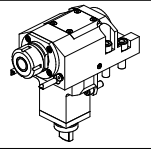	CMZ150.1.10

		PAGINA Page Seite
MODULO MOTORIZZATO RADIALE Radial driven tool Radial angetriebenes Werkzeug	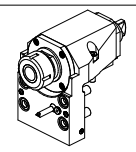	CMZ010.2.00
MODULO MOTORIZZATO RADIALE MTSK Radial MTSK driven tool Radial MTSK angetriebenes Werkzeug	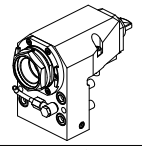	CMZ010.2.00.K
MODULO MOTORIZZATO RADIALE 12000 RPM Radial driven tool 12000 rpm Radial angetriebenes Werkzeug 12000 rpm	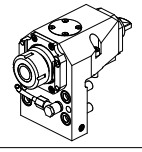	CMZ010.2.01
MODULO MOTORIZZATO RADIALE MTSK 12000 RPM Radial MTSK driven tool 12000 rpm Radial MTSK angetriebenes Werkzeug 12000 rpm	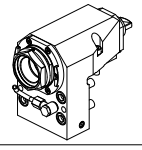	CMZ010.2.01.K
MODULO MOTORIZZATO RADIALE MAGGIORATO Radial reinforced driven tool Radial angetriebenes Werkzeug vergroessert	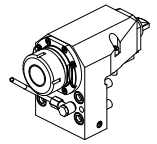	CMZ020.2.00
MODULO MOTORIZZATO RADIALE MAGGIORATO 12000 RPM Radial reinforced driven tool 12000 rpm Radial angetriebenes Werkzeug vergroessert 12000 rpm	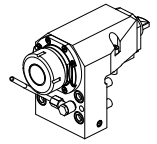	CMZ020.2.01
MODULO MOTORIZZATO RADIALE 2 USCITE IN Y Radial single side twin head driven tool in Y Radial angetriebenes Werkzeug 2 Ausgaenge in Y	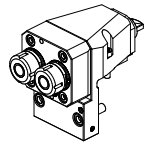	CMZ080.2.00
MODULO MOTORIZZATO RADIALE 2 USCITE IN Y 12000 RPM Radial single side twin head driven tool in Y 12000 rpm Radial angetriebenes Werkzeug 2 Ausgaenge in Y 12000 rpm	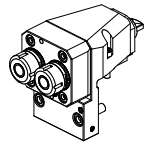	CMZ080.2.01
MODULO MOTORIZZATO RADIALE 2 USCITE IN Y 12000 RPM Radial single side twin head driven tool in Y 12000 rpm Radial angetriebenes Werkzeug 2 Ausgaenge in Y 12000 rpm	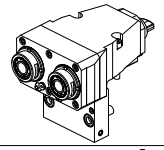	CMZ080.2.05
MODULO MOTORIZZATO SPECIALE RADIALE DISASSATO IN Z 376mm Radial special driven tool re-directed in Z by 376mm Radial spezial angetriebenes Werkzeug achsversetzt in Z um 376mm	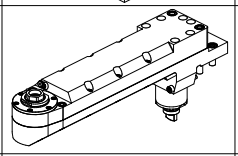	CMZ125.2.10
MODULO MOTORIZZATO SPECIALE RADIALE IN Y Radial special driven tool in Y Radial spezial angetriebenes Werkzeug in Y	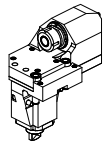	CMZ130.2.00
MODULO MOTORIZZATO ASSIALE H=55mm Axial driven tool H=55mm Axial angetriebenes Werkzeug H=55mm	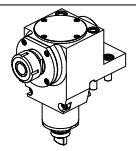	CMZ150.2.10

		PAGINA Page Seite
MODULO MOTORIZZATO ASSIALE MTSK H=55mm Axial MTSK driven tool H=55mm Axial MTSK angetriebenes Werkzeug H=55mm	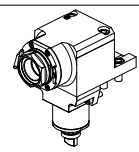	CMZ150.2.10.K
MODULO MOTORIZZATO ASSIALE H=55mm 12000 RPM Axial driven tool H=55mm 12000 rpm Axial angetriebenes Werkzeug H=55mm 12000 rpm	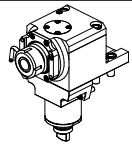	CMZ150.2.11
MODULO MOTORIZZATO ASSIALE MTSK H=55mm 12000 RPM Axial MTSK driven tool H=55mm 12000 rpm Axial MTSK angetriebenes Werkzeug H=55mm 12000 rpm	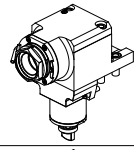	CMZ150.2.11.K
MODULO MOTORIZZATO ASSIALE PER CONTROMANDRINO H=55mm Axial driven tool for subspindle H=55mm Axial angetriebenes Werkzeug fuer Gegenspindel H=55mm	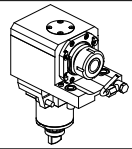	CMZ155.2.10
MODULO MOTORIZZATO ASSIALE PER CONTROMANDRINO 12000 RPM H=55mm Axial driven tool for subspindle 12000 rpm H=55mm Axial angetriebenes Werkzeug fuer Gegenspindel 12000 rpm H=55mm	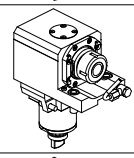	CMZ155.2.11
MODULO MOTORIZZATO ASSIALE MAGGIORATO H=55mm Axial reinforced driven tool H=55mm Axial angetriebenes Werkzeug vergroessert H=55mm	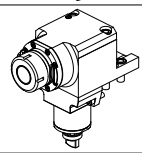	CMZ170.2.10
MODULO MOTORIZZATO ASSIALE MAGGIORATO 12000 RPM H=55mm Axial reinforced driven tool 12000 rpm H=55mm Axial angetriebenes Werkzeug vergroessert 12000 rpm H=55mm	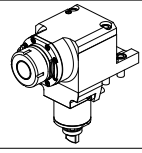	CMZ170.2.11
MODULO MOTORIZZATO ASSIALE BISPORGENTE Axial opposite face twin driven tool Axial angetriebenes Werkzeug halb vorspringend	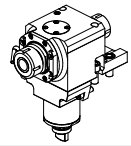	CMZ240.2.10
MODULO MOTORIZZATO ASSIALE BISPORGENTE 12000 RPM Axial opposite face twin driven tool 12000 rpm Axial angetriebenes Werkzeug halb vorspringend 12000 rpm	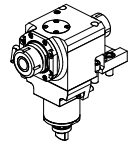	CMZ240.2.11
MODULO MOTORIZZATO ASSIALE 2 USCITE IN Y Axial single side twin head driven tool in Y Axial angetriebenes Werkzeug 2 Ausgaenge in Y	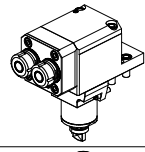	CMZ260.2.10
MODULO MOTORIZZATO ORIENTABILE ±90° ±90° adjustable angle driven tool Angetriebenes Werkzeug schwenkbar ±90°	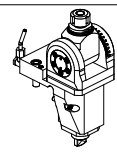	CMZ333.2.00
MODULO MOTORIZZATO ORIENTABILE ±90° CON NONIO DIGITALE ±90° adjustable angle driven tool with digital display Angetriebenes Werkzeug schwenkbar ±90° mit digital display	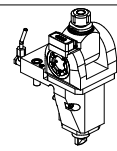	CMZ333.2.01

		PAGINA Page Seite
MODULO MOTORIZZATO ORIENTABILE ±90° ±90° adjustable angle driven tool Angetriebenes Werkzeug schwenkbar ±90°	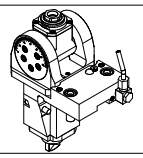	CMZ335.2.00
MODULO MOTORIZZATO PORTACREATORE Driven gear hobber Angetriebenes Zahnradwaelzfraes-Werkzeug	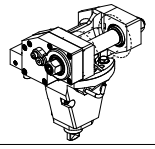	CMZ340.2.00
MODULO MOTORIZZATO PORTACREATORE RADIALE Radial driven gear hobber Radial Angetriebenes Zahnradwaelzfraes-Werkzeug	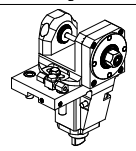	CMZ340.2.30
MODULO MOTORIZZATO PORTACREATORE MAGGIORATO Reinforced driven gear hobber Angetriebenes Zahnradwaelzfraes-Werkzeug vergroessert	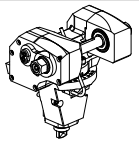	CMZ340.2.60
MODULO MOTORIZZATO PER VITI SENZA FINE Driven tool for worm screws Angetriebenes werkzeug für schrauben ohne ende	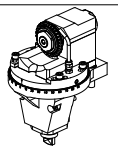	CMZ359.2.00
MODULO MOTORIZZATO STOZZATORE CORSA 50mm H=80mm Slotting driven tool 50mm stroke H=80mm Keilnutenstossmaschine 50mm Hub H=80mm	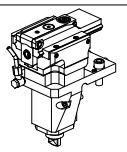	CMZ360.2.00
MODULO MOTORIZZATO STOZZATORE CORSA 25mm H=80mm Slotting driven tool 25mm stroke H=80mm Keilnutenstossmaschine 25mm Hub H=80mm	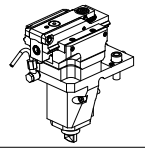	CMZ360.2.01
PORTAUTENSILE RADIALE SOVRAPPOSTO QD=25mm Radial single side twin static tool QD=25mm Radial Werkzeughalter ueberlagert QD=25mm	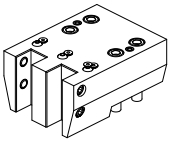	CMZ440.2.00
PORTAUTENSILE RADIALE DOPPIO QD=25mm Radial double static tool QD=25mm Radial Doppel-Werkzeughalter QD=25mm	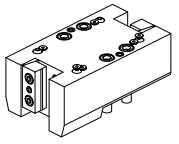	CMZ453.2.00
PORTAUTENSILE RADIALE DOPPIO SOVRAPPOSTO QD=25mm Radial double side twin static tool QD=25mm Radial Doppel-Werkzeughalter ueberlagert QD=25mm	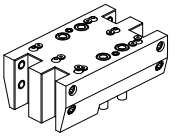	CMZ460.2.00
PORTAUTENSILE PER LAMA DOPPIO Radial double blade holder Radial Doppel-Abstechhalter	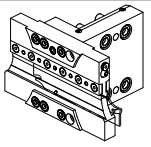	CMZ520.2.00
PORTAUTENSILE PER LAMA DOPPIO CON LUBRIFICAZIONE INTERNA Radial double blade holder with internal coolant Radial Doppel-Abstechhalter mit Innenkuehlung	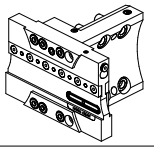	CMZ520.2.04

		PAGINA Page Seite
PORTAUTENSILE ASSIALE PER BARENO 2 POSIZIONI Ø32mm Axial double boring bar holder Ø32mm Axial Bohrhalter 2 Positionen Ø32mm	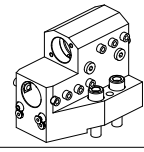	CMZ862.2.00
PORTAUTENSILE ASSIALE ARRETRATO PER BARENO 2 POSIZIONI Ø20mm Axial 2 position rear set boring bar holder Ø20mm Axial Bohrhalter 2 Positionen zurueckversetzt Ø20mm	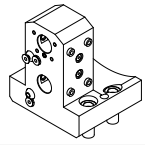	CMZ876.2.00
CONTROPUNTA PER CONTROMANDRINO Tailstock for subspindle Gegenspintz fuer Gegenspindel	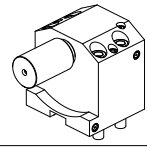	CMZ950.2.00

		PAGINA Page Seite
MODULO MOTORIZZATO RADIALE MT CAPTO Radial driven tool MT CAPTO Radial angetriebenes Werkzeug MT CAPTO	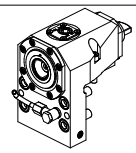	CMZ010.B.40
MODULO MOTORIZZATO RADIALE 12000 RPM MT CAPTO Radial driven tool 12000 rpm MT CAPTO Radial angetriebenes Werkzeug 12000 rpm MT CAPTO	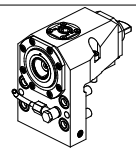	CMZ010.B.41
MODULO MOTORIZZATO ASSIALE MT CAPTO Axial driven tool MT CAPTO Axial angetriebenes Werkzeug MT CAPTO	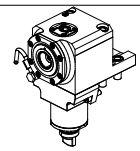	CMZ150.B.40
MODULO MOTORIZZATO ASSIALE 12000 RPM MT CAPTO Axial driven tool 12000 rpm MT CAPTO Axial angetriebenes Werkzeug 12000 rpm MT CAPTO	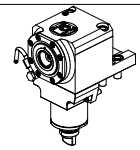	CMZ150.B.41
MODULO MOTORIZZATO ASSIALE PER CONTROMANDRINO MT CAPTO Axial driven tool for subspindle MT CAPTO Axial angetriebenes Werkzeug fuer Gegenspindel MT CAPTO	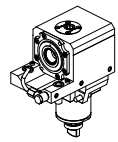	CMZ155.B.40
MODULO MOTORIZZATO ASSIALE PER CONTROMANDRINO 12000 RPM MT CAPTO Axial driven tool for subspindle 12000 rpm MT CAPTO Axial angetriebenes Werkzeug fuer Gegenspindel 12000 rpm MT CAPTO	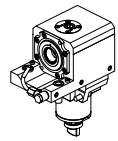	CMZ155.B.41
PORTAUTENSILE RADIALE SINGOLO ARRETRATO MT CAPTO Radial single rear-set static tool MT CAPTO Radial Single-Werkzeughalter zurueckversetzt MT CAPTO	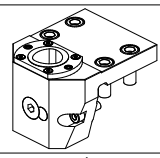	CMZ430.B.40
PORTAUTENSILE RADIALE SINGOLO ARRETRATO MT CAPTO Radial single rear-set static tool MT CAPTO Radial Single-Werkzeughalter zurueckversetzt MT CAPTO	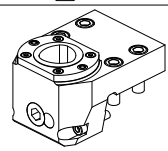	CMZ430.B.50
PORTAUTENSILE ASSIALE SINGOLO MT CAPTO Axial single static tool MT CAPTO Axial Single-Werkzeughalter MT CAPTO	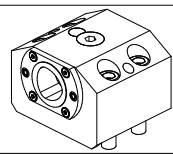	CMZ550.B.40
PORTAUTENSILE ASSIALE SINGOLO MT CAPTO Axial single static tool MT CAPTO Axial Single-Werkzeughalter MT CAPTO	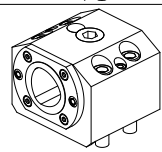	CMZ550.B.50
PORTAUTENSILE ASSIALE BISPORGENTE MT CAPTO Axial opposite face twin static tool MT CAPTO Axial Halter halb vorspringend mit MT CAPTO	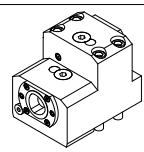	CMZ570.B.40

		PAGINA Page Seite
MODULO MOTORIZZATO RADIALE Radial driven tool Radial angetriebenes Werkzeug	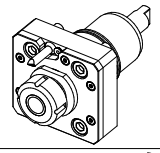	CMZ020.3.00
MODULO MOTORIZZATO RADIALE 12000 RPM Radial driven tool 12000 rpm Radial angetriebenes Werkzeug 12000 rpm	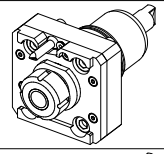	CMZ020.3.01
MODULO MOTORIZZATO RADIALE MTSK Radial MTSK driven tool Radial MTSK angetriebenes Werkzeug	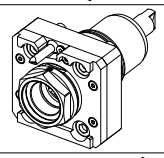	CMZ020.3.00.K
MODULO MOTORIZZATO RADIALE MOLTIPLICATO I=1:3 Radial geared-up I=1:3 driven tool Radial angetriebenes Werkzeug uebersetzt I=1:3	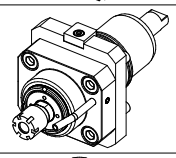	CMZ055.3.00
MODULO MOTORIZZATO RADIALE 2 USCITE IN Y Radial single side twin head driven tool in Y Radial angetriebenes Werkzeug 2 Ausgaenge in Y	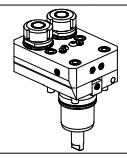	CMZ090.3.00
MODULO MOTORIZZATO RADIALE DISASSATO 30mm ORIENTABILE ±30° Radial ±30°adjustable angle driven tool re-directed by 30mm Radial angetriebenes Werkzeug schwenkbar ±30° achsversetzt um 30mm	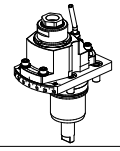	CMZ135.3.00
MODULO MOTORIZZATO ASSIALE H=55mm Axial driven tool H=55mm Axial angetriebenes Werkzeug H=55mm	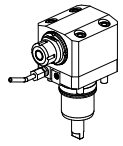	CMZ150.3.10
MODULO MOTORIZZATO ASSIALE H=65mm Axial driven tool H=65mm Axial angetriebenes Werkzeug H=65mm	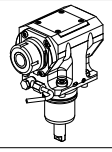	CMZ150.3.15
MODULO MOTORIZZATO ASSIALE MTSK H=65mm Axial MTSK driven tool H=65mm Axial MTSK angetriebenes Werkzeug H=65mm		CMZ150.3.15.K
MODULO MOTORIZZATO ASSIALE 12000 RPM H=65mm Axial driven tool 12000 rpm H=65mm Axial angetriebenes Werkzeug 12000 rpm H=65mm	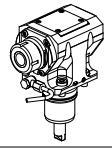	CMZ150.3.16
MODULO MOTORIZZATO ASSIALE MTSK 12000 RPM H=65mm Axial MTSK driven tool 12000 rpm H=65mm Axial MTSK angetriebenes Werkzeug 12000 rpm H=65mm		CMZ150.3.16.K

		PAGINA Page Seite
MODULO MOTORIZZATO ASSIALE H=75mm Axial driven tool H=75mm Axial angetriebenes Werkzeug H=75mm	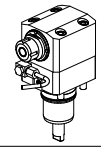	CMZ150.3.20
MODULO MOTORIZZATO ASSIALE H=75mm Axial driven tool H=75mm Axial angetriebenes Werkzeug H=75mm		CMZ150.3.21
MODULO MOTORIZZATO ASSIALE MTSK H=75mm Axial MTSK driven tool H=75mm Axial MTSK angetriebenes Werkzeug H=75mm		CMZ150.3.21.K
MODULO MOTORIZZATO ASSIALE MAGGIORATO H=55mm Axial reinforced driven tool H=55mm Axial angetriebenes Werkzeug vergroessert H=55mm	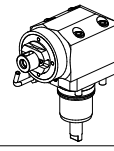	CMZ170.3.10
MODULO MOTORIZZATO ASSIALE MAGGIORATO MTSK H=55mm Axial MTSK reinforced driven tool H=55mm Axial MTSK angetriebenes Werkzeug vergroessert H=55mm	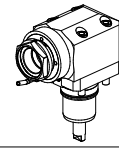	CMZ170.3.10.K
MODULO MOTORIZZATO ASSIALE MAGGIORATO H=75mm Axial reinforced driven tool H=75mm Axial angetriebenes Werkzeug vergroessert H=75mm	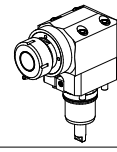	CMZ170.3.20
MODULO MOTORIZZATO ASSIALE MAGGIORATO MTSK H=75mm Axial MTSK reinforced driven tool H=75mm Axial MTSK angetriebenes Werkzeug vergroessert H=75mm	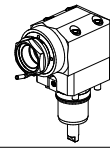	CMZ170.3.20.K
MODULO MOTORIZZATO ASSIALE ARRETRATO H=75mm Axial rear-set driven tool H=75mm Axial angetriebenes Werkzeug zurueckversetzt H=75mm	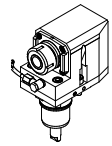	CMZ180.3.10
MODULO MOTORIZZATO RADIALE ARRETRATO MTSK H=75mm Axial MTSK rear-set driven tool H=75mm Axial MTSK angetriebenes Werkzeug zurueckversetzt H=75mm		CMZ180.3.10.K
MODULO MOTORIZZATO ASSIALE MOLTIPLICATO I=1:3 H=55mm Axial geared-up I=1:3 driven tool H=55mm Axial angetriebenes Werkzeug uebersetzt I=1:3 H=55mm	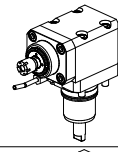	CMZ205.3.10
MODULO MOTORIZZATO ASSIALE MOLTIPLICATO I=1:3 H=75mm Axial geared-up I=1:3 driven tool H=75mm Axial angetriebenes Werkzeug uebersetzt I=1:3 H=75mm	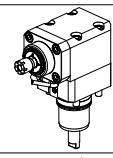	CMZ205.3.20
MODULO MOTORIZZATO ASSIALE ARRETRATO MOLTIPLICATO I=1:3 H=75mm Axial geard-up I=1:3 rear-set driven tool H=75mm Axial angetriebenes Werkzeug uebersetzt I=1:3 zurueckversetzt H=75mm	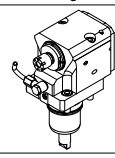	CMZ226.3.10

		PAGINA Page Seite
MODULO MOTORIZZATO ASSIALE PER POLIGONATURA INTERNA H=55mm Axial driven tool for internal polygon-making H=55mm Axial angetriebenes Werkzeug fuer interne Facettierung H=55mm	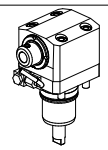	CMZ230.3.10
MODULO MOTORIZZATO ASSIALE PER POLIGONATURA INTERNA H=75mm Axial driven tool for internal polygon-making H=75mm Axial angetriebenes Werkzeug fuer interne Facettierung H=75mm	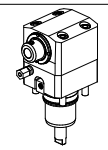	CMZ230.3.20
MODULO MOTOR. ASSIALE 2 USCITE IN Y PER POLIGONAT. INTERNA H=75mm Axial single side twin head driven tool in Y for internal polygon-making H=75mm Axial angetriebenes Werkzeug 2 Ausgange in Y fuer interne Facettierung H=75mm	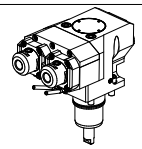	CMZ233.3.10
MODULO MOTORIZZATO ASSIALE BISPORGENTE H=55mm Axial opposite face twin driven tool H=55mm Axial angetriebenes Werkzeug halb vorspringend H=55mm	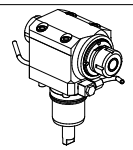	CMZ240.3.10
MODULO MOTORIZZATO ASSIALE BISPORGENTE H=65mm Axial opposite face twin driven tool H=65mm Axial angetriebenes Werkzeug halb vorspringend H=65mm	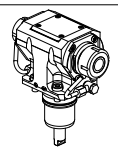	CMZ240.3.15
MODULO MOTORIZZATO ASSIALE BISPORGENTE 12000 RPM H=65mm Axial opposite face twin driven tool 12000 rpm H=65mm Axial angetriebenes Werkzeug halb vorspringend 12000 rpm H=65mm	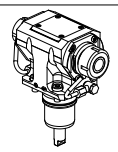	CMZ240.3.16
MODULO MOTORIZZATO ASSIALE BISPORGENTE H=75mm Axial opposite face twin driven tool H=75mm Axial angetriebenes Werkzeug halb vorspringend H=75mm	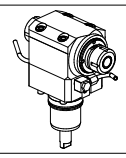	CMZ240.3.20
MODULO MOTORIZZATO ASSIALE BISPORGENTE H=75mm Axial opposite face twin driven tool H=75mm Axial angetriebenes Werkzeug halb vorspringend H=75mm	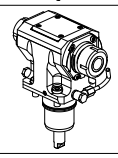	CMZ240.3.21
MODULO MOTORIZZATO ASSIALE 2 USCITE IN Y H=55mm Axial single side twin head driven tool in Y H=55mm Axial angetriebenes Werkzeug 2 Ausgaenge in Y H=55mm	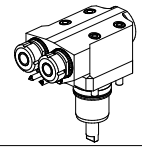	CMZ260.3.10
MODULO MOTORIZZATO ASSIALE 2 USCITE IN Y H=75mm Axial single side twin head driven tool in Y H=75mm Axial angetriebenes Werkzeug 2 Ausgaenge in Y H=75mm	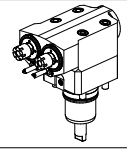	CMZ260.3.20
MODULO MOTORIZZATO ORIENTABILE ±90° ±90° adjustable angle driven tool Angetriebenes Werkzeug schwenkbar ±90°	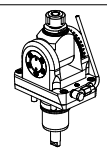	CMZ333.3.00
MODULO MOTORIZZATO ORIENTABILE ±90° CON NONIO DIGITALE ±90° adjustable angle driven tool with digital display Angetriebenes Werkzeug schwenkbar ±90° mit digital display	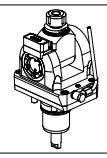	CMZ333.3.01

		PAGINA Page Seite
MODULO MOTORIZZATO ORIENTABILE ±90° ±90° adjustable angle driven tool Angetriebenes Werkzeug schwenkbar ±90°	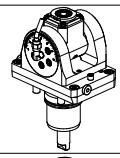	CMZ335.3.00
MODULO MOTORIZZATO ORIENTABILE ±90° CON NONIO DIGITALE ±90° adjustable angle driven tool with digital display Angetriebenes Werkzeug schwenkbar ±90° mit digital display	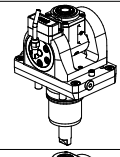	CMZ335.3.01
MODULO MOTORIZZATO ORIENTABILE ±90° MOLTIPLICATO I=1:2 ±90° adjustable angle driven tool geared-up I=1:2 Angetriebenes Werkzeug schwenkbar ±90° uebersetzt I=1:2	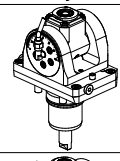	CMZ336.3.00
MOD. MOTORIZZ. ORIENTABILE ±90° MOLTIPL. I=1:2 CON NONIO DIGITALE ±90° adjustable angle driven tool geared-up I=1:2 with digital display Angetriebenes Werkzeug schwenkbar +/-90° uebersetzt I=1:2 mit digital display	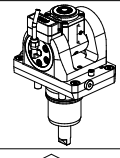	CMZ336.3.01
MODULO MOTORIZZATO PORTACREATORE Driven gear hobber Angetriebenes Zahnradwalzfras-Werkzeug	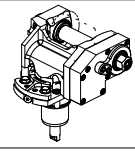	CMZ340.3.00
MODULO MOTORIZZATO PORTACREATORE RADIALE Radial driven gear hobber Radial angetriebenes Zahnradwaelzfraes-Werkzeug	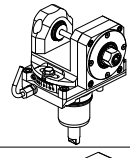	CMZ340.3.30
MODULO MOTORIZZATO ASSIALE MTSK PER POWER SKIVING H=85mm Axial MTSK driven tool for Power Skiving H=85mm Axial MTSK angetriebenes Werkzeug fuer Power Skiving H=85mm	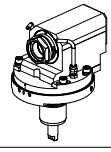	CMZ350.3.00.K
MODULO MOTORIZZATO STOZZATORE CORSA 50mm H=66mm Slotting driven tool 50mm stroke H=66mm Keilnutenstossmaschine 50mm Hub H=66mm	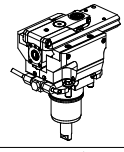	CMZ360.3.00
MODULO MOTORIZZATO STOZZATORE CORSA 25mm H=66mm Slotting driven tool 25mm stroke H=66mm Keilnutenstossmaschine 25mm Hub H=66mm	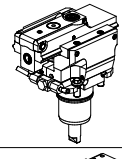	CMZ360.3.01
MODULO MOTORIZZATO STOZZATORE CORSA 50mm H=76mm Slotting driven tool 50mm stroke H=76mm Keilnutenstossmaschine 50mm Hub H=76mm	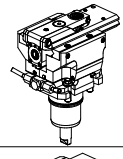	CMZ360.3.10
MODULO MOTORIZZATO STOZZATORE CORSA 25mm H=76mm Slotting driven tool 25mm stroke H=76mm Keilnutenstossmaschine 25mm Hub H=76mm	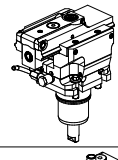	CMZ360.3.11
PORTAUTENSILE RADIALE SINGOLO QD=20mm / QD=3/4" Radial single static tool QD=20mm / QD=3/4" Radial Single-Werkzeughalter QD=20mm / QD=3/4"	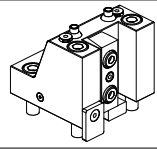	CMZ420.3.00

		PAGINA Page Seite
PORTAUTENSILE RADIALE SINGOLO QD=25mm Radial single static tool QD=25mm Radial Single-Werkzeughalter QD=25mm	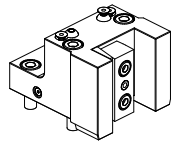	CMZ423.3.00
PORTAUTENSILE RADIALE SINGOLO ARRETRATO QD=20mm Radial single rear set static tool QD=20mm Radial Single-Werkzeughalter zurueckversetzt QD=20mm	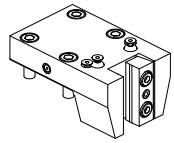	CMZ430.3.00
PORTAUTENSILE RADIALE SOVRAPPOSTO QD=20mm / QD=3/4" Radial single side twin static tool QD=20mm / QD=3/4" Radial Werkzeughalter ueberlagert QD=20mm / QD=3/4"	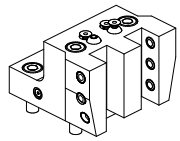	CMZ440.3.00
PORTAUTENSILE RADIALE MULTIPLO QD=20mm Radial multiple static tool QD=20mm Radial Mehrfach-Halter QD=20mm	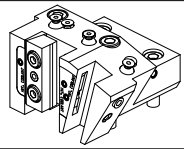	CMZ440-3-50
PORTAUTENSILE RADIALE DOPPIO QD=20mm / QD=3/4" Radial double static tool QD=20mm / QD=3/4" Radial Doppel-Werkzeughalter QD=20mm / QD=3/4"	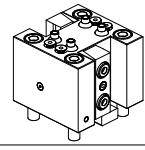	CMZ450.3.00
PORTAUTENSILE RADIALE MULTIPLO QD=20mm / QD=3/4" Radial multiple static tool QD=20mm / QD=3/4" Radial Mehrfach-Werkzeughalter QD=20mm / QD=3/4"	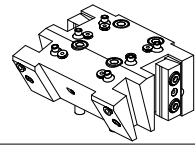	CMZ470.3.00
PORTAUTENSILE PER LAMA Radial blade holder Radial Abstechhalter	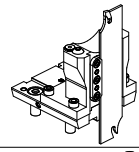	CMZ520.3.01
PORTAUTENSILE PER LAMA CON LUBRIFICAZIONE INTERNA Radial blade holder with internal coolant Radial Abstechhalter mit Innenkuehlung	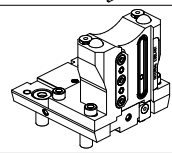	CMZ520.3.05
PORTAUTENSILE ASSIALE SINGOLO QD=20mm / QD=3/4" Axial single static tool QD=20mm / QD=3/4" Axial Single-Werkzeughalter QD=20mm / QD=3/4"	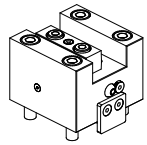	CMZ550.3.00
PORTAUTENSILE ASSIALE SINGOLO QD=25mm Axial single static tool QD=25mm Axial Single-Werkzeughalter QD=25mm	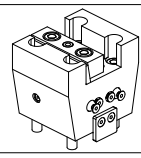	CMZ552.3.00
PORTAUTENSILE ASSIALE PER BARENO Ø32mm / Ø1 1/4" H=55mm Axial single boring bar holder Ø32mm / Ø1 1/4" H=55mm Axial Bohrhalter Ø32mm / Ø1 1/4" H=55mm	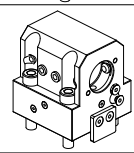	CMZ650.3.10

		PAGINA Page Seite
PORTAUTENSILE ASSIALE SPECIALE PER BARENO Ø32mm / Ø1 1/4" H=55mm Axial special boring bar holder Ø32mm / Ø1 1/4" H=55mm Axial spezial Bohrhalter Ø32mm / Ø1 1/4" H=55mm	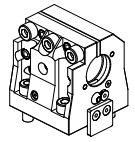	CMZ650.3.20
PORTAUTENSILE ASSIALE PER BARENO Ø40mm / Ø32mm / Ø1 1/4" H=75mm Axial single boring bar holder Ø40mm / Ø32mm / Ø1 1/4" H=75mm Axial Bohrhalter Ø40mm / Ø32mm / Ø1 1/4" H=75mm	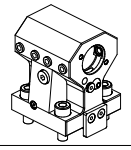	CMZ660.3.10
PORTAUTENSILE ASSIALE PER BARENO Ø40mm / Ø32mm / Ø1 1/4" H=75mm Axial single boring bar holder Ø40mm / Ø32mm / Ø1 1/4" H=75mm Axial Bohrhalter Ø40mm / Ø32mm / Ø1 1/4" H=75mm	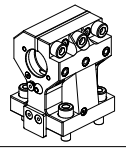	CMZ660.3.20
PORTAUTENSILE ASSIALE PER BARENO Ø32mm H=80mm Axial single boring bar holder Ø32mm H=80mm Axial Bohrhalter Ø32mm H=80mm	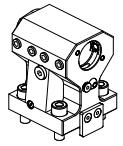	CMZ665.3.10
PORTAUTENSILE ASSIALE PER BARENO Ø25mm / Ø1" H=55 mm Axial single boring bar holder Ø25mm / Ø1" H=55 mm Axial Bohrhalter Ø25mm / Ø1" H=55 mm	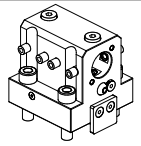	CMZ670.3.10
PORTAUTENSILE ASSIALE PER BARENO Ø25mm / Ø1" H=75 mm Axial single boring bar holder Ø25mm / Ø1" H=75 mm Axial Bohrhalter Ø25mm / Ø1" H=75 mm	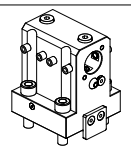	CMZ680.3.10
PORTAUTENSILE ASSIALE ARRETRATO PER BARENO Ø32mm H=75mm Axial single rear set boring bar holder Ø32mm H=75mm Axial Bohrhalter zurueckversetzt Ø32mm H=75mm	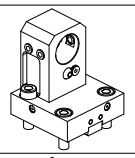	CMZ847.3.10
PORTAUTENSILE ASSIALE ARRETRATO PER BARENO Ø25mm H=75mm Axial single rear set boring bar holder Ø25mm H=75mm Axial Bohrhalter zurueckversetzt Ø25mm H=75mm	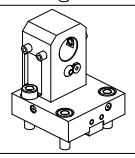	CMZ848.3.10
PORTAUTENSILE ASSIALE PER BARENO 2 POSIZIONI Ø25mm / Ø1" Axial double boring bar holder Ø25mm / Ø1" Axial Bohrhalter 2 Positionen Ø25mm / Ø1"	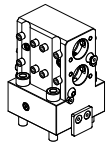	CMZ864.3.00
PORTAUTENSILE ASSIALE PER BARENO 3 POSIZIONI Ø25mm / Ø1" Axial 3 position boring bar holder Ø25mm / Ø1" Axial Bohrhalter 3 Positionen Ø25mm / Ø1"	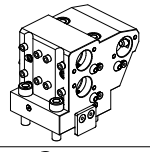	CMZ884.3.00
PORTAUTENSILE ASSIALE BISPORGENTE PORTAPINZA H=75mm Axial double collet chuck holder H=75mm Axial Doppel-Spannzangenhalter H=75mm	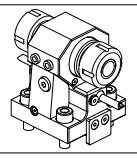	CMZ940.3.00

		PAGINA Page Seite
PORTAUTENSILE RADIALE SINGOLO ARRETRATO MT CAPTO Single rear-set radial static tool MT CAPTO Radial Single-Werkzeughalter zurueckversetzt MT CAPTO	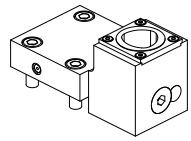	CMZ430.C.40
PORTAUTENSILE ASSIALE SINGOLO ARRETRATO MT CAPTO Axial rear-set boring single static tool MT CAPTO Axial Single-Werkzeughalter zurueckversetzt MT CAPTO	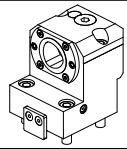	CMZ555.C.40

		PAGINA Page Seite
MODULO MOTORIZZATO RADIALE Radial driven tool Radial angetriebenes Werkzeug	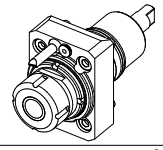	CMZ010.4.00
MODULO MOTORIZZATO RADIALE MTSK Radial MTSK driven tool Radial MTSK angetriebenes Werkzeug	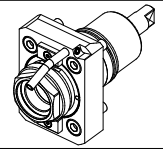	CMZ010.4.00.K
MODULO MOTORIZZATO RADIALE MAGGIORATO Radial reinforced driven tool Radial angetriebenes Werkzeug vergroessert	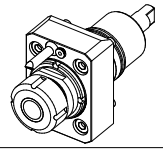	CMZ020.4.00
MODULO MOTORIZZATO RADIALE DISASSATO IN Z 36mm Radial driven tool re-directed in Z by 36mm Radial angetriebenes Werkzeug achsversetzt in Z um 36mm	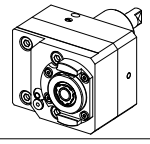	CMZ030.4.10
MODULO MOTORIZZATO RADIALE RIDOTTO I=2:1 DISASSATO IN Z 60mm Radial geared-down I=2:1 driven tool re-directed in Z by 60mm Radial angetriebenes Werkzeug untersetzt I=2:1 achsversetzt in Z um 60mm	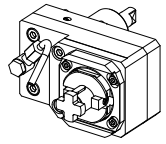	CMZ030.4.20
MODULO MOTORIZZATO RADIALE RIDOTTO I=3:1 DISASSATO IN Z 60mm Radial geared-down I=3:1 driven tool re-directed in Z by 60mm Radial angetriebenes Werkzeug untersetzt I=3:1 achsversetzt in Z um 60mm	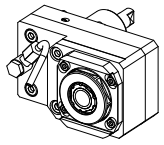	CMZ030.4.25
MODULO MOTORIZZATO RADIALE MOLTIPLICATO I=1:2 DISASSATO IN Z 36mm Radial geared-up I=1:2 driven tool re-directed in Z by 36mm Radial angetriebenes Werkzeug uebersetzt I=1:2 achsversetzt in Z um 36mm	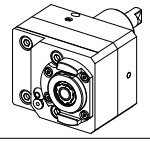	CMZ030.4.30
MODULO MOTORIZZATO RADIALE RIDOTTO I=2:1 DISASSATO IN Z 43mm Radial geared-down I=2:1 driven tool re-directed in Z by 43mm Radial angetriebenes Werkzeug untersetzt I=2:1 achsversetzt in Z um 43mm	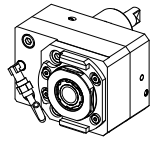	CMZ033.4.20
MODULO MOTORIZZATO RADIALE 2 USCITE IN Y Radial single side twin head driven tool in Y Radial angetriebenes Werkzeug 2 Ausgaenge in Y	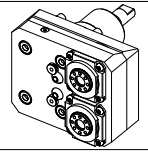	CMZ090.4.00
MODULO MOTORIZZATO ASSIALE H=60mm Axial driven tool H=60mm Axial angetriebenes Werkzeug H=60mm	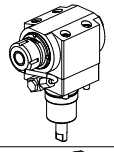	CMZ150.4.10
MODULO MOTORIZZATO ASSIALE MTSK H=60mm Axial MTSK driven tool H=60mm Axial MTSK angetriebenes Werkzeug H=60mm	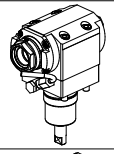	CMZ150.4.10.K
MODULO MOTORIZZATO ASSIALE MOLTIPLICATO I = 1:2 Axial geared-up I=1:2 driven tool Axial angetriebenes Werkzeug uebersetzt I=1:2	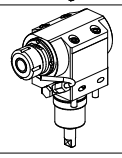	CMZ200.4.10

		PAGINA Page Seite
MODULO MOTORIZZATO ASSIALE ARRETRATO MOLTIPLICATO I=1:3 H=65mm Axial geard-up I=1:3 rear-set driven tool H=65mm Axial angetriebenes Werkzeug uebersetzt I=1:3 zurueckversetzt H=65mm	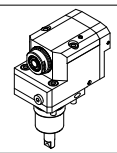	CMZ226.4.05
MODULO MOTORIZZATO ASSIALE PER POLIGONATURA INTERNA H=60mm Axial driven tool for internal polygon-making H=60mm Axial angetriebenes Werkzeug fuer interne Facettierung H=60mm	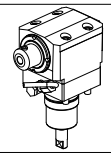	CMZ230.4.10
MODULO MOTORIZZATO ASSIALE BISPORGENTE H=60mm Axial opposite face twin driven tool H=60mm Axial angetriebenes Werkzeug halb vorspringend H=60mm	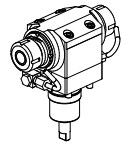	CMZ240.4.10
MODULO MOTORIZZATO ASSIALE 2 USCITE IN Y H=60mm Axial single side twin head driven tool in Y H=60mm Axial angetriebenes Werkzeug 2 Ausgaenge in Y H=60mm	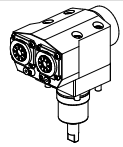	CMZ260.4.20
MODULO MOTORIZZATO ORIENTABILE ±90° H=35mm ±90° adjustable angle driven tool H=35mm Angetriebenes Werkzeug schwenkbar ±90° H=35mm	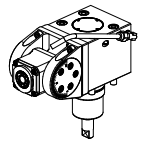	CMZ337.4.00
MODULO MOTORIZZATO ORIENTABILE ±90° H=55mm ±90° adjustable angle driven tool H=55mm Angetriebenes Werkzeug schwenkbar ±90° H=55mm	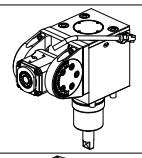	CMZ337.4.10 NEW
MODULO MOTORIZZATO PORTACREATORE Driven gear hobber Angetriebenes Zahnradwaelzfraes-Werkzeug	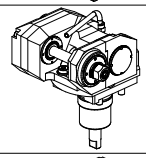	CMZ340.4.20
MODULO MOTORIZZATO STOZZATORE CORSA 25mm H=65mm Slotting driven tool 25mm stroke H=65mm Keilnutenstossmaschine 25mm Hub H=65mm	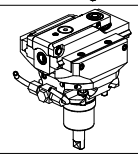	CMZ360.4.02
PORTAUTENSILE RADIALE SINGOLO QD=20mm Radial single static tool QD=20mm Radial Single-Werkzeughalter QD=20mm	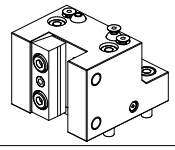	CMZ420.4.00
PORTAUTENSILE RADIALE SINGOLO QD=25mm Radial single static tool QD=25mm Radial Single-Werkzeughalter QD=25mm	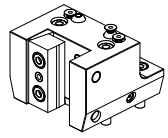	CMZ423.4.00
PORTAUTENSILE RADIALE SOVRAPPOSTO QD=20mm Radial single side twin static tool QD=20mm Radial Werkzeughalter ueberlagert QD=20mm	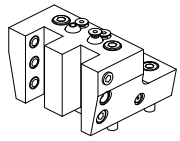	CMZ440.4.00
PORTAUTENSILE RADIALE DOPPIO QD=20mm Radial double static tool QD=20mm Radial Doppel-Werkzeughalter QD=20mm	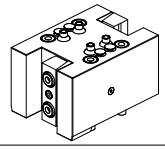	CMZ450.4.00

		PAGINA Page Seite
PORTAUTENSILE RADIALE DOPPIO SOVRAPPOSTO QD=20mm Radial double side twin static tool QD=20mm Radial Doppel-Werkzeughalter ueberlagert QD=20mm	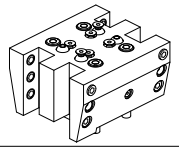	CMZ460.4.00
PORTAUTENSILE RADIALE MULTIPLO QD=20mm Radial multiple static tool QD=20mm Radial Mehrfach-Halter QD=20mm	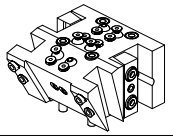	CMZ470.4.00
PORTAUTENSILE RADIALE PER LAMA Radial blade holder Radial Abstechhalter	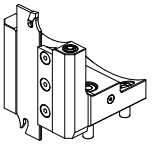	CMZ513.4.10
PORTAUTENSILE ASSIALE SINGOLO QD=20mm Axial single static tool QD=20mm Axial Single-Werkzeughalter QD=20mm	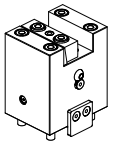	CMZ550.4.00
PORTAUTENSILE ASSIALE PER BARENO Ø32mm H=65mm Axial single boring bar holder Ø32mm H=65mm Axial Bohrhalter Ø32mm H=65mm	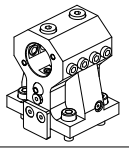	CMZ660.4.10
PORTAUTENSILE ASSIALE PER BARENO Ø25mm H=60mm Axial single boring bar holder Ø25mm H=60mm Axial Bohrhalter Ø25mm H=60mm	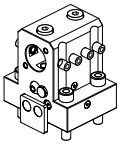	CMZ670.4.10
PORTAUTENSILE ASSIALE PER BARENO Ø25mm H=75mm Axial single boring bar holder Ø25mm H=75mm Axial Bohrhalter Ø25mm H=75mm	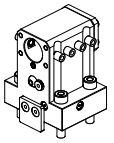	CMZ670.4.20
PORTAUTENSILE ASSIALE PER BARENO Ø20mm H=70mm Axial single boring bar holder Ø20mm H=70mm Axial Bohrhalter Ø20mm H=70mm	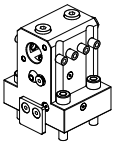	CMZ690.4.10
PORTAUTENSILE ASSIALE PER BARENO 2 POSIZIONI IN Y Ø25mm H=65mm Axial double boring bar holder 2 positions in Y Ø25mm H=65mm Axial Bohrhalter 2 Positionen in Y Ø25mm H=65mm	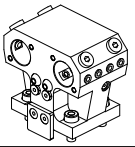	CMZ864.4.30
PORTAUTENSILE ASSIALE PER BARENO 2 POSIZIONI Ø25mm Axial double boring bar holder Ø25mm Axial Bohrhalter 2 Positionen Ø25mm	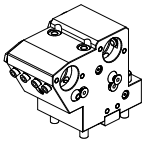	CMZ864.4.50
PORTAUTENSILE ASSIALE PER BARENO 3 POSIZIONI Ø16mm Axial 3 position upright boring bar holder Ø16mm Axial Bohrhalter 3 Positionen Ø16mm	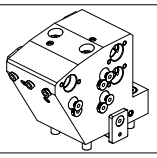	CMZ888.4.50

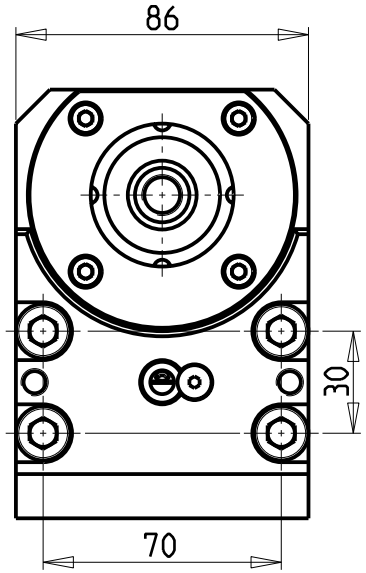

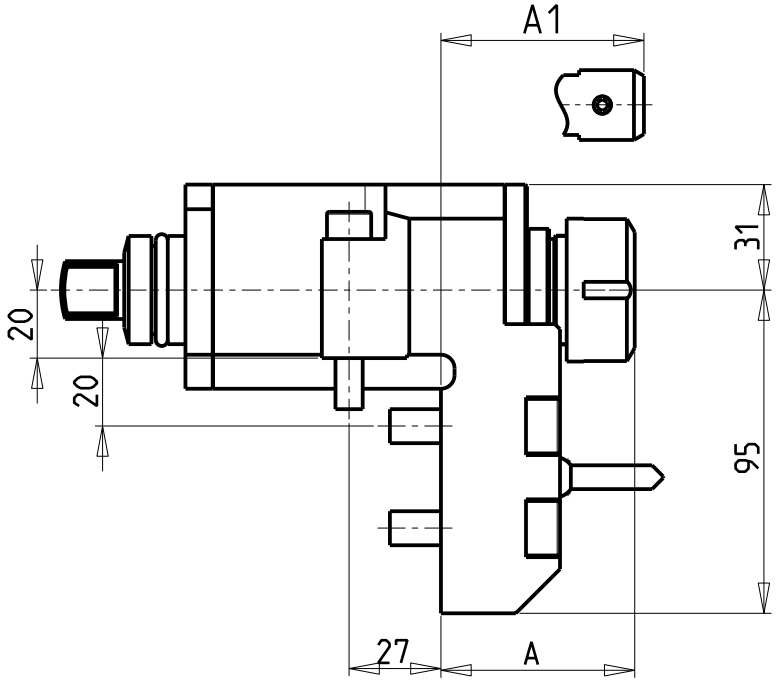

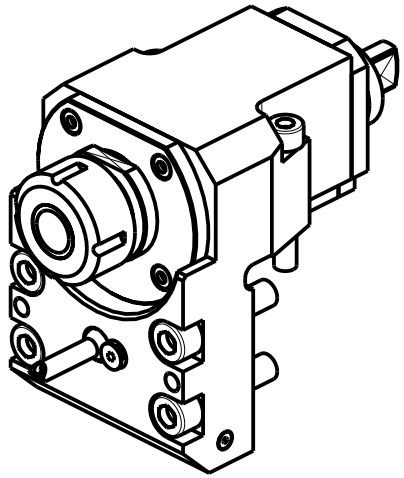

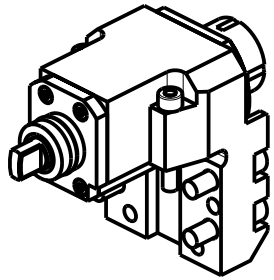

Cod. MT	Mandrino Spindle Spindel	I	RPM	Coppia Max Max Torque Max Drehmoment	Lubrificazione est. Ext. coolant Aussenkuehlung	A	A1	CHIAVI NON INCLUSE Keys not included Schluessel nicht einbegriffen	
CMZ0010225	ER25	1:1	6000	40Nm	X	56.96	-	CHSTER25	CHUB36
CMZ0010232	ER32	1:1	6000	40Nm	X	65.96	-	CHSTER32	CHUB36
CMZ0010325	WELDON 25	1:1	6000	40Nm	X	-	76.8		

CMZ

MOD: TL15M/MS/TM - TB67M - TB46M

MODULO MOTORIZZATO RADIALE
Radial driven tool
Radial angetriebenes Werkzeug

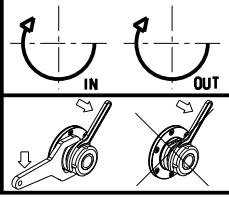

M.T. srl
Via Casino Albini 480
Tel. 0541/956034-957884
Fax 0541/956341
47842 S. GIOVANNI IN M. (RN)
e-mail: mtma@mtmarchetti.com
http://www.mtmarchetti.com

MT®

PAGINA CMZ010-1-00

Subject to change without notice.

04/2022

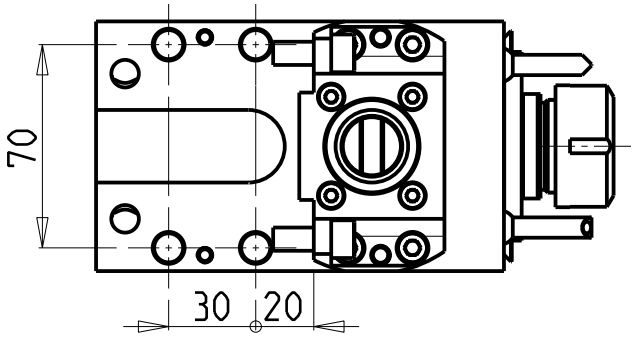

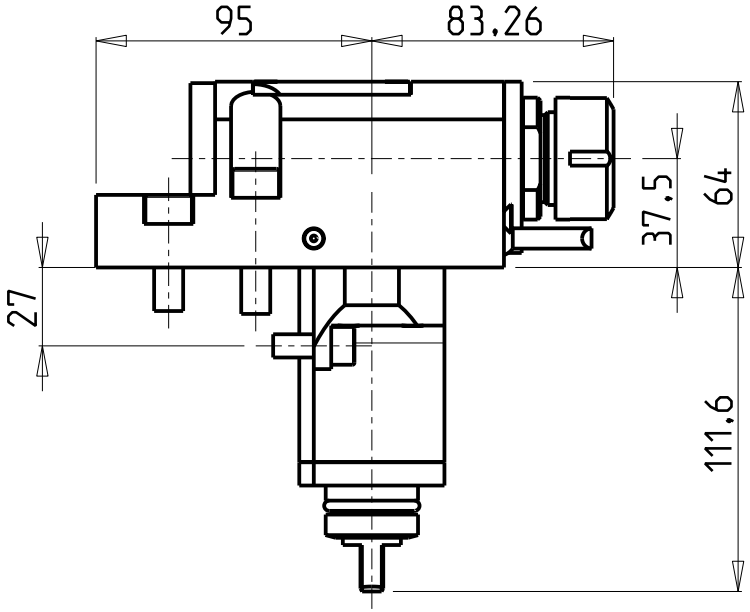

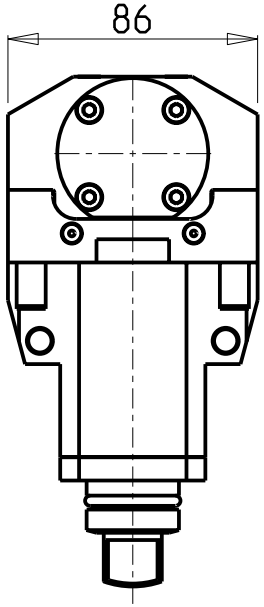

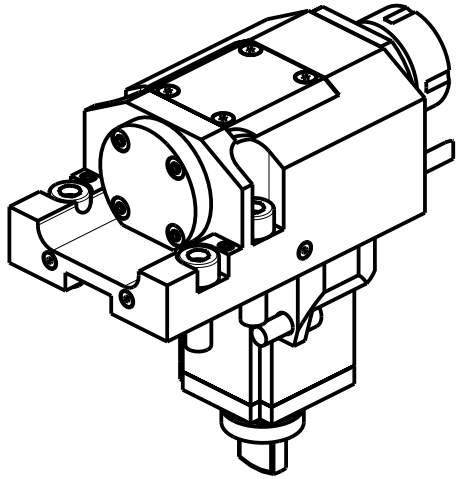

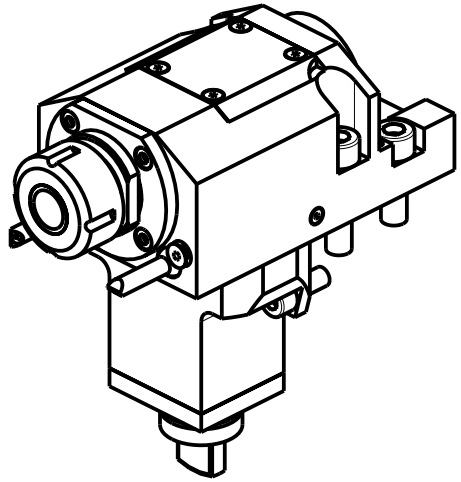

Cod. MT	Mandrino Spindle Spindel	I	RPM	Coppia Max Max Torque Max Drehmoment	Lubrificazione int. Coolant through Innenkuehlung	Lubrificazione est. Ext. coolant Aussenkuehlung	CHIAVI NON INCLUSE Keys not included Schluessel nicht einbegriffen	
CMZ0020225	ER25	1:1	6000	40Nm	-	X	CHSTER25	CHUB36
CMZ0020125	ER25	1:1	6000	40Nm	P=70bar	X	CHSTER25	CHUB36

CMZ

MOD: TL15M/MS/TM - TB67M - TB46M

MODULO MOTORIZZATO ASSIALE H=37.5mm
Axial driven tool H=37.5mm
Axial angetriebenes Werkzeug H=37.5mm

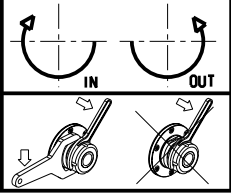

M.T. srl
Via Casino Albini 480
Tel. 0541/956034-957884
Fax 0541/956341
47842 S. GIOVANNI IN M. (RN)
e-mail: mtma@mtmarchetti.com
http://www.mtmarchetti.com

MT®

Subject to change without notice.

04/2022

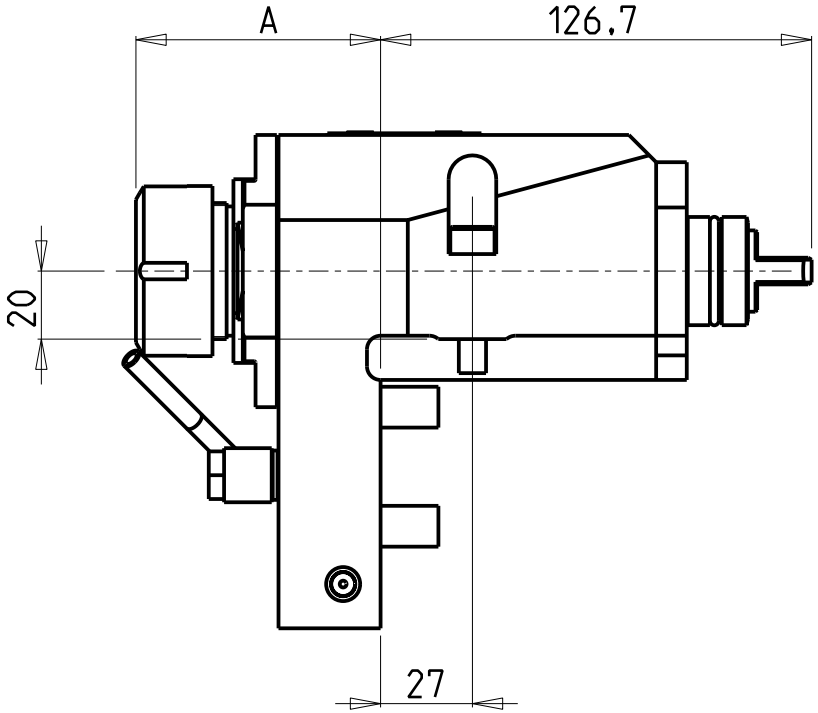

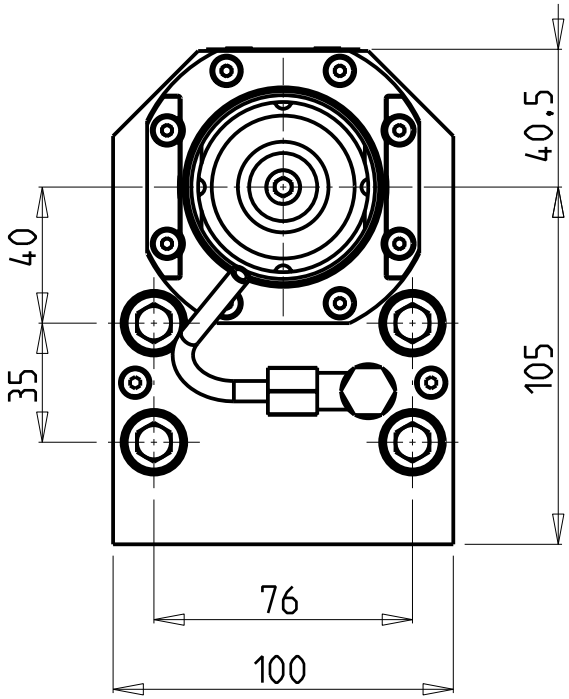

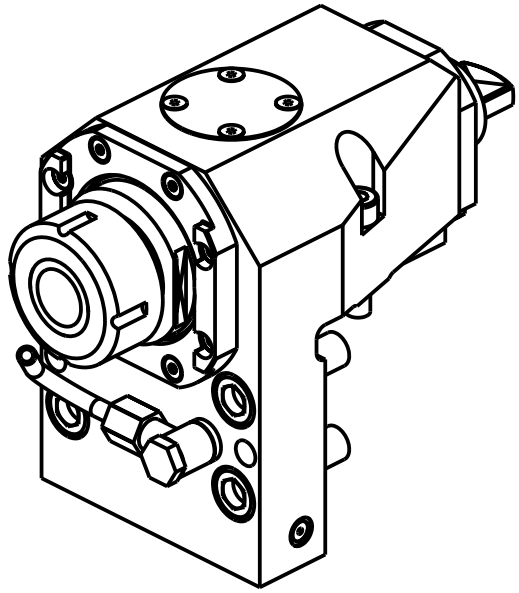

Cod. MT	Mandrino Spindle Spindel	I	RPM	Coppia Max Max Torque Max Drehmoment	Lubrificazione int. Coolant through Innenkuehlung	Lubrificazione est. Ext. coolant Aussenkuehlung	A	CHIAVI NON INCLUSE Keys not included Schluessel nicht einbegriffen		
MSL0150132	ER32	1:1	6000	105Nm	-	X	71,91	MNZ0410005 •	CHSTER32	
MSL0151232	ER32	1:1	6000	105Nm	P=70bar	X	74,91	MNZ0410005 •	CHSTER32	NEW

• Chiave inclusa
• Key included
• Schluessel inbegriffen

CMZ

MOD:TL25AM/AMS/BM/BMS - TL20M/MS/TM - TA15-20-25-30M/Y/MS/MY/YS - TC15-20-25-30-35M/Y/MS/MY/YS
TD15-20-25-30-35-45-55M/Y/MS/MY/YS

MODULO MOTORIZZATO RADIALE
Radial driven tool
Radial angetriebenes Werkzeug

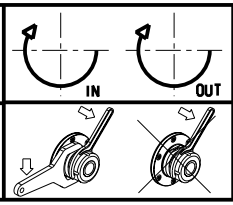

M.T. srl
Via Casino Albini 480
Tel. 0541/956034-957884
Fax 0541/956341
47842 S. GIOVANNI IN M. (RN)
e-mail: mtma@mtmarchetti.com
http://www.mtmarchetti.com

PAGINA CMZ010-2-00

Subject to change without notice.

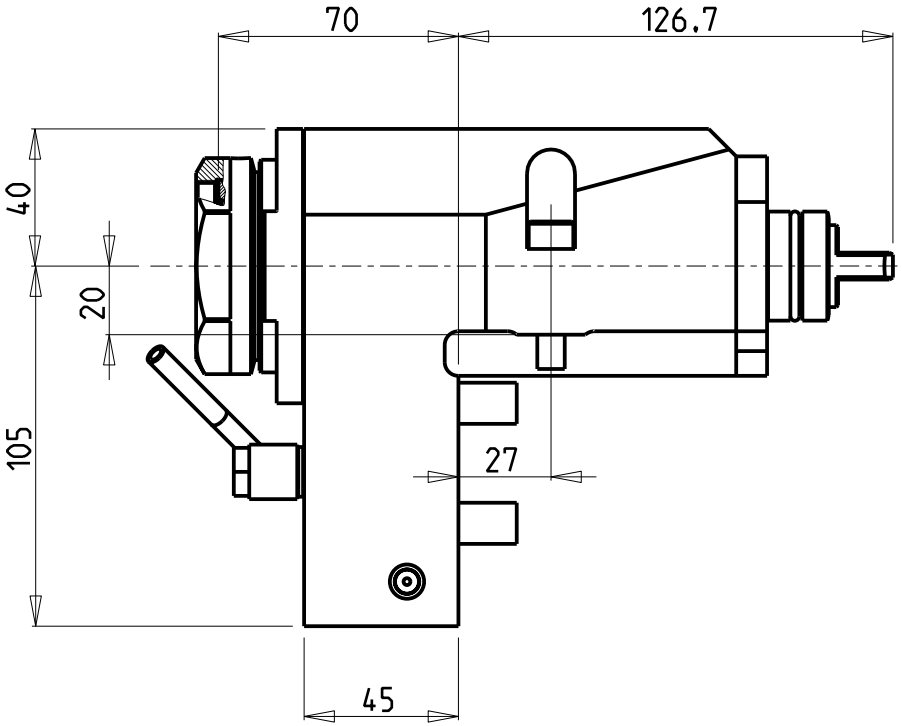

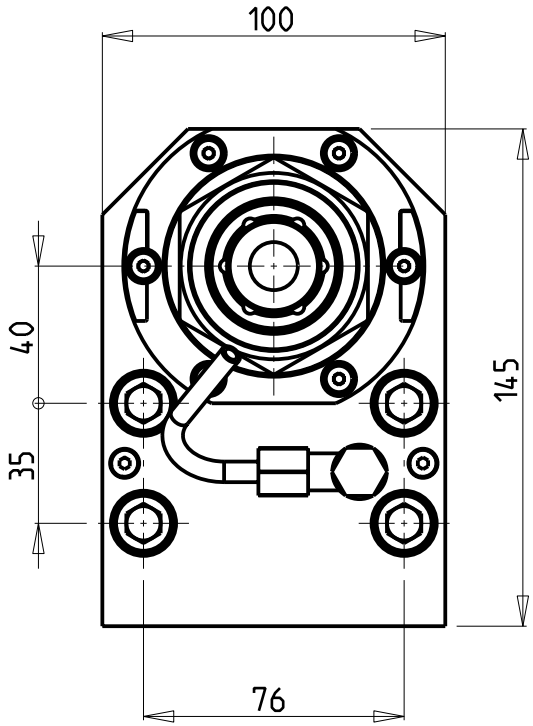

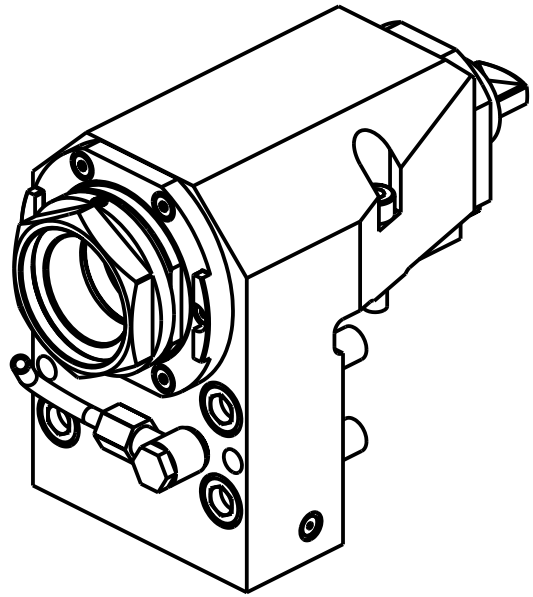

PER PORTAUTENSILI MODULARI MTSK-50 VEDI PAG. TBL300-1-50
FOR MTSK-50 QUIK CHANGE TOOLHOLDERS CLAMPINGS SEE PAGE TBL300-1-50
FUER MTSK-50 MODULARE WERKZEUGAUFNAHMEN SIEHE SEITE TBL300-1-50

Cod. MT	Mandrino Spindle Spindel	I	RPM	Coppia Max Max Torque Max Drehmoment	Lubrificazione int. Coolant through Innenkuehlung	Lubrificazione est. Ext. coolant Aussenkuehlung	CHIAVI NON INCLUSE Keys not included Schluessel nicht einbegriffen		
MSL0360150	MTSK-50	1:1	6000	105Nm	-	X	CHUB55	OKU0430007 •	
MSL0360250	MTSK-50	1:1	6000	105Nm	P=70bar	X	CHUB55	OKU0430007 •	NEW

• Chiave inclusa
• Key included
• Schluessel inbegriffen

CMZ

MOD:TL25AM/AMS/BM/BMS - TL20M/MS/TM - TA15-20-25-30M/Y/MS/MY/YS - TC15-20-25-30-35M/Y/MS/MY/YS
TD15-20-25-30-35-45-55M/Y/MS/MY/YS

MODULO MOTORIZZATO RADIALE MTSK
Radial MTSK driven tool
Radial MTSK angetriebenes Werkzeug

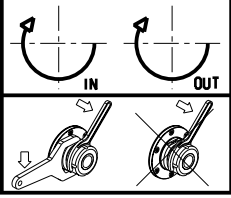

M.T. srl
Via Casino Albini 480
Tel. 0541/956034-957884
Fax 0541/956341
47842 S. GIOVANNI IN M. (RN)
e-mail: mtma@mtmarchetti.com
http://www.mtmarchetti.com

Subject to change without notice.

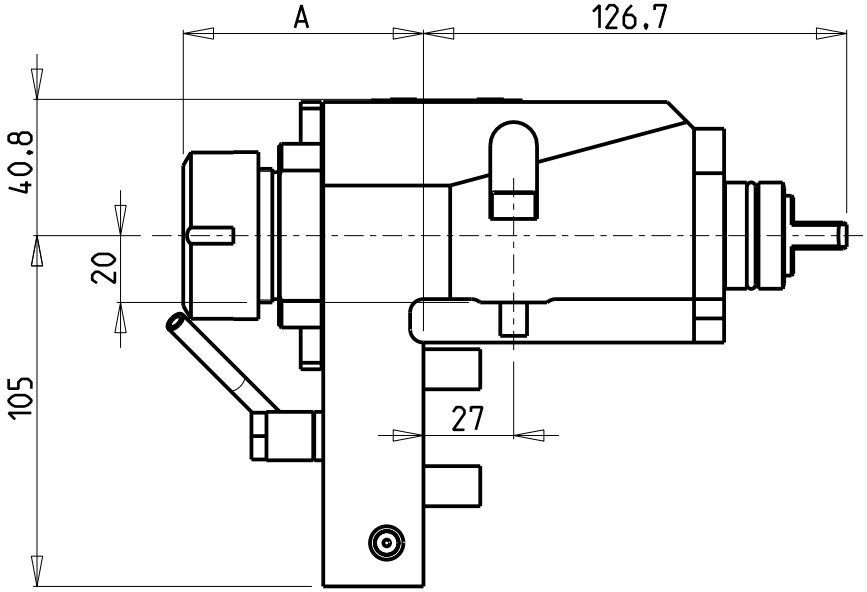

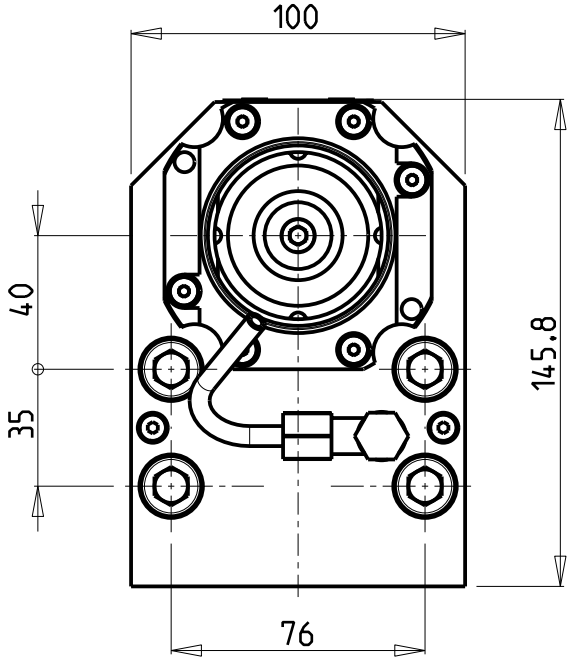

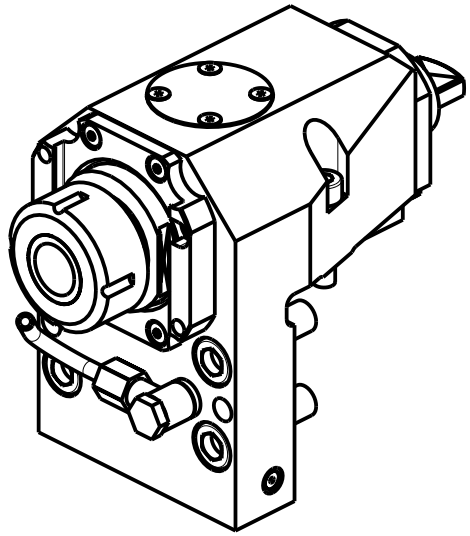

Cod. MT	Mandrino Spindle Spindel	I	RPM	Coppia Max Max Torque Max Drehmoment	Lubrificazione int. Coolant through Innenkuehlung	Lubrificazione est. Ext. coolant Aussenkuehlung	A	CHIAVI NON INCLUSE Keys not included Schluessel nicht einbegriffen	
MSL0250132	ER32	1:1	12000	105Nm	-	X	71.91	MNZ0410005 •	CHSTER32
MSL0251232	ER32	1:1	12000	105Nm	P=70bar	X	74.91	MNZ0410005 •	CHSTER32

NEW

• Chiave inclusa
• Key included
• Schluessel inbegriffen

CMZ

MOD:TL25AM/AMS/BM/BMS - TL20M/MS/TM - TA15-20-25-30M/Y/MS/MY/YS - TC15-20-25-30-35M/Y/MS/MY/YS
TD15-20-25-30-35-45-55M/Y/MS/MY/YS

MODULO MOTORIZZATO RADIALE 12000 RPM
Radial driven tool 12000 rpm
Radial angetriebenes Werkzeug 12000 rpm

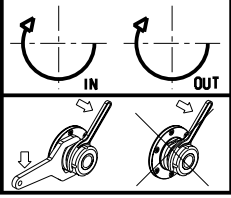

M.T. srl
Via Casino Albini 480
Tel. 0541/956034-957884
Fax 0541/956341
47842 S. GIOVANNI IN M. (RN)
e-mail: mtma@mtmarchetti.com
http://www.mtmarchetti.com

MT®

PAGINA CMZ010-2-01

Subject to change without notice.

04/2022

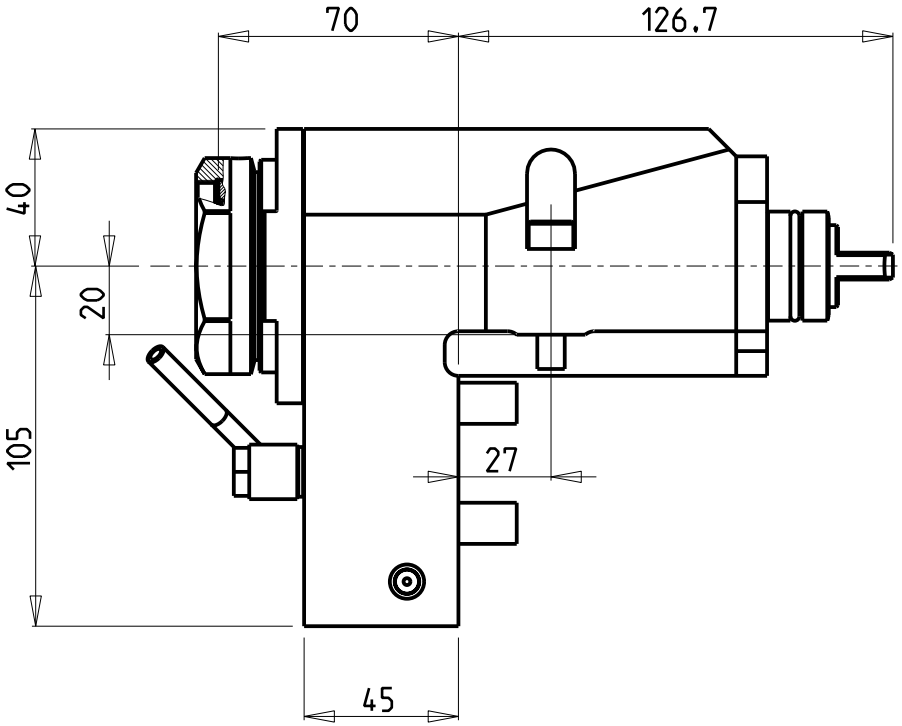

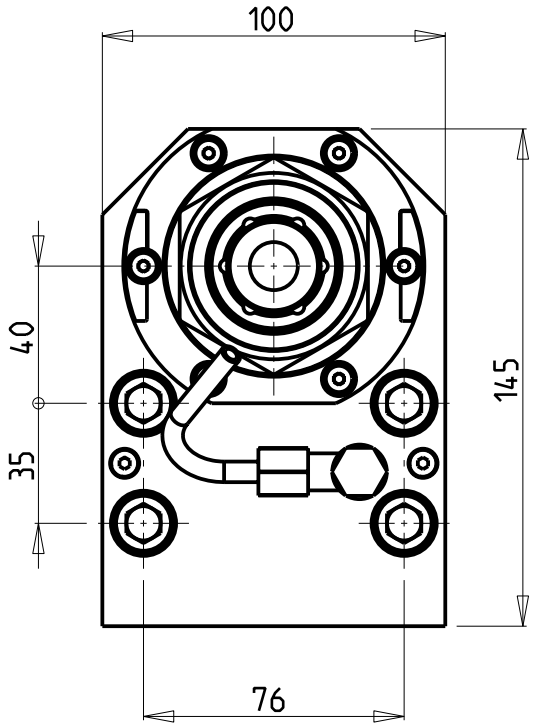

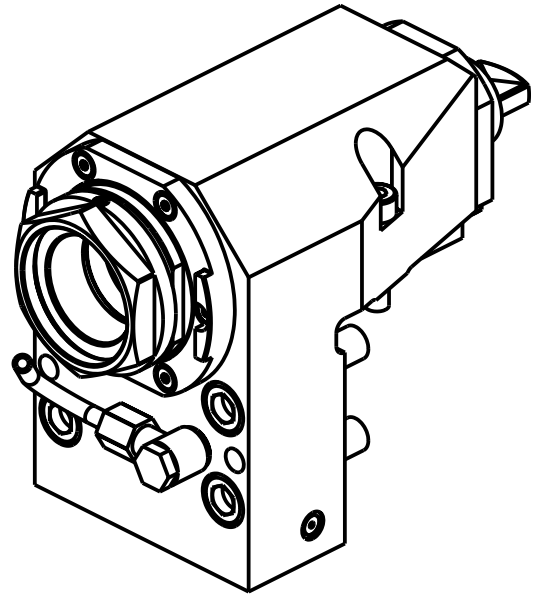

PER PORTAUTENSILI MODULARI MTSK-50 VEDI PAG. TBL300-1-50
FOR MTSK-50 QUIK CHANGE TOOLHOLDERS CLAMPINGS SEE PAGE TBL300-1-50
FUER MTSK-50 MODULARE WERKZEUGAUFNAHMEN SIEHE SEITE TBL300-1-50

Cod. MT	Mandrino Spindle Spindel	I	RPM	Coppia Max Max Torque Max Drehmoment	Lubrificazione int. Coolant through Innenkuehlung	Lubrificazione est. Ext. coolant Aussenkuehlung	CHIAVI NON INCLUSE Keys not included Schluessel nicht einbegriffen		
MSL0290150	MTSK-50	1:1	12000	105Nm	-	X	CHUB55	OKU0430007 •	
MSL0290250	MTSK-50	1:1	12000	105Nm	P=70bar	X	CHUB55	OKU0430007 •	NEW

• Chiave inclusa
• Key included
• Schluessel inbegriffen

CMZ

MOD:TL25AM/AMS/BM/BMS - TL20M/MS/TM - TA15-20-25-30M/Y/MS/MY/YS - TC15-20-25-30-35M/Y/MS/MY/YS
TD15-20-25-30-35-45-55M/Y/MS/MY/YS

MODULO MOTORIZZATO RADIALE MTSK 12000 RPM
Radial MTSK driven tool 12000 rpm
Radial MTSK angetriebenes Werkzeug 12000 rpm

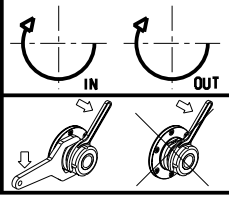

M.T. srl
Via Casino Albini 480
Tel. 0541/956034-957884
Fax 0541/956341
47842 S. GIOVANNI IN M. (RN)
e-mail: mtma@mtmarchetti.com
http://www.mtmarchetti.com

PAGINA CMZ010-2-01-K

Subject to change without notice.

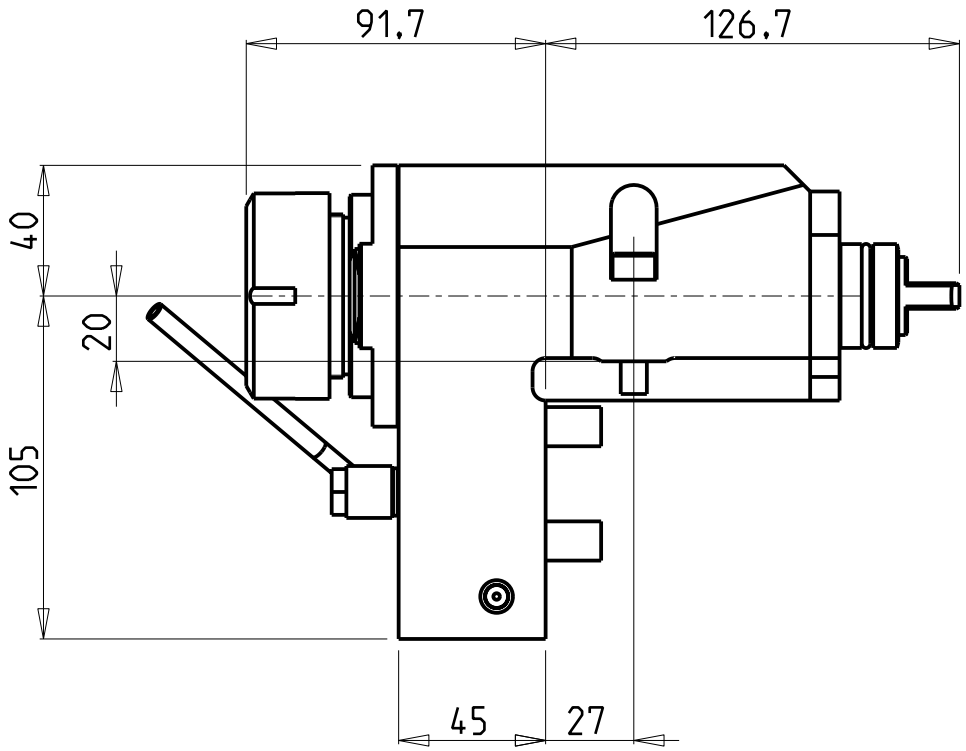

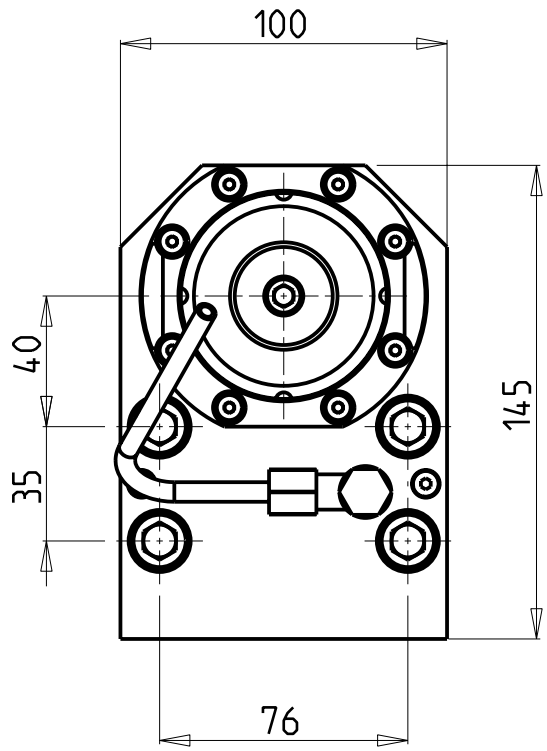

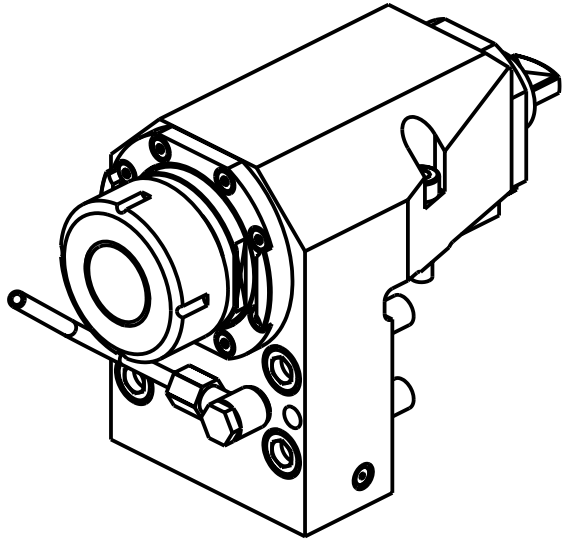

Cod. MT	Mandrino Spindle Spindel	I	RPM	Coppia Max Max Torque Max Drehmoment	Lubrificazione int. Coolant through Innenkuehlung	Lubrificazione est. Ext. coolant Aussenkuehlung	CHIAVI NON INCLUSE Keys not included Schluessel nicht einbegriffen	
MSL0500140	ER40	1:1	6000	105Nm	-	X	OKU0430007 •	CHSTER40
MSL0500240	ER40	1:1	6000	105Nm	P=70bar	X	OKU0430007 •	CHSTER40

• Chiave inclusa
• Key included
• Schluessel inbegriffen

CMZ

MOD:TL25AM/AMS/BM/BMS - TL20M/MS/TM - TA15-20-25-30M/Y/MS/MY/YS - TC15-20-25-30-35M/Y/MS/MY/YS
TD15-20-25-30-35-45-55M/Y/MS/MY/YS

MODULO MOTORIZZATO RADIALE MAGGIORATO
Radial reinforced driven tool
Radial angetriebenes Werkzeug vergroessert

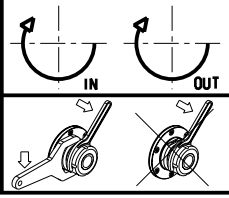

M.T. srl
Via Casino Albini 480
Tel. 0541/956034-957884
Fax 0541/956341
47842 S. GIOVANNI IN M. (RN)
e-mail: mtma@mtmarchetti.com
http://www.mtmarchetti.com

PAGINA CMZ020-2-00

Subject to change without notice.

04/2022

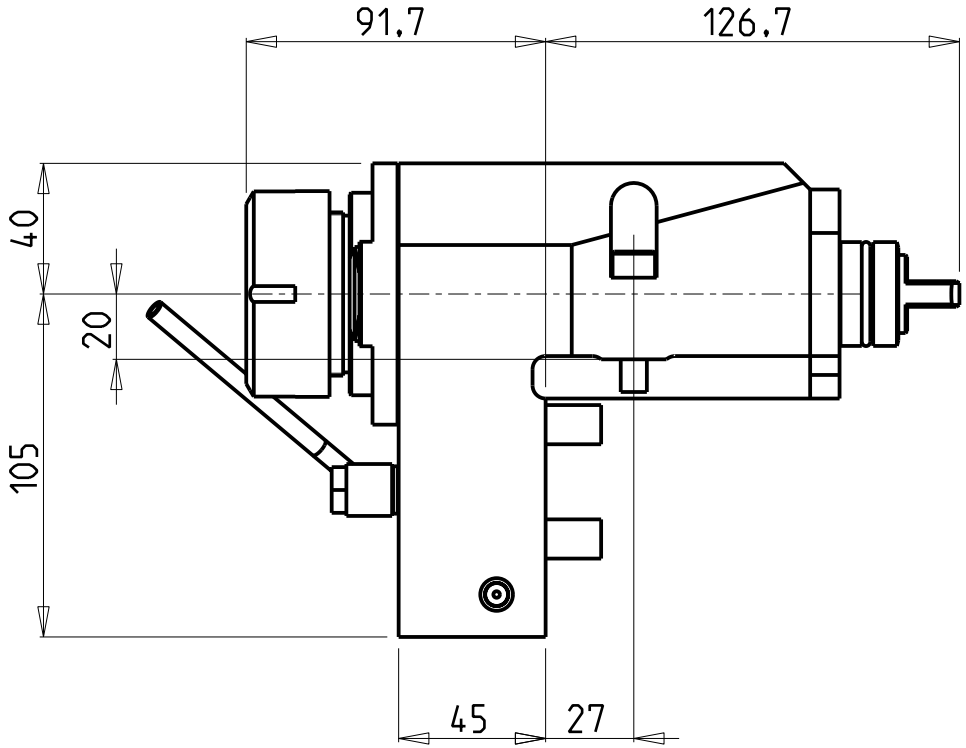

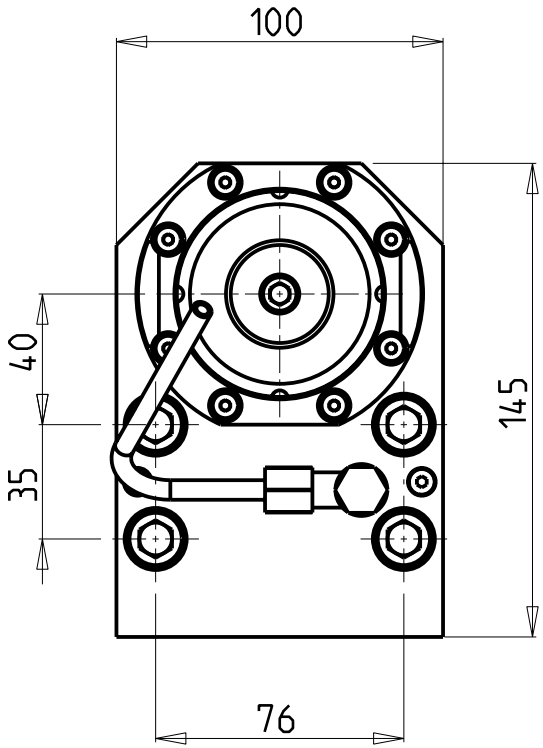

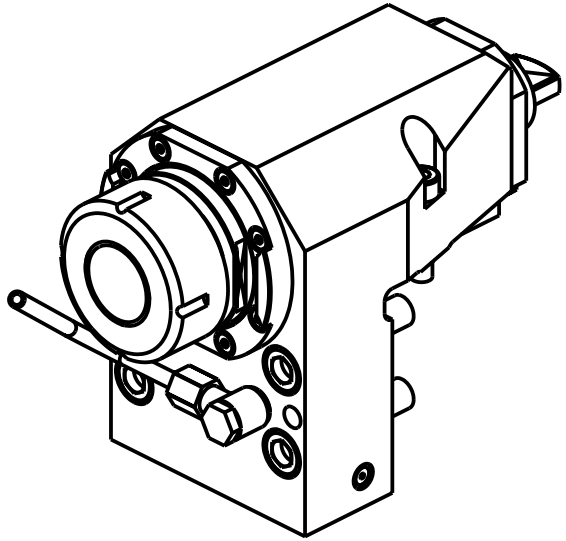

Cod. MT	Mandrino Spindle Spindel	I	RPM	Coppia Max Max Torque Max Drehmoment	Lubrificazione est. Ext. coolant Aussenkuehlung	CHIAVI NON INCLUSE Keys not included Schluessel nicht einbegriffen	
MSL0510140	ER40	1:1	12000	105Nm	X	OKU0430007 •	CHSTER40

• Chiave inclusa
• Key included
• Schluessel inbegriffen

CMZ

MOD:TL25AM/AMS/BM/BMS - TL20M/MS/TM - TA15-20-25-30M/Y/MS/MY/YS - TC15-20-25-30-35M/Y/MS/MY/YS
TD15-20-25-30-35-45-55M/Y/MS/MY/YS

MODULO MOTORIZZATO RADIALE MAGGIORATO 12000 RPM
Radial reinforced driven tool 12000 rpm
Radial angetriebenes Werkzeug vergroessert 12000 rpm

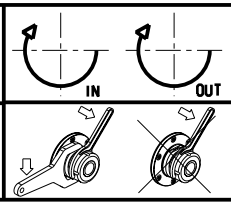

M.T. srl
Via Casino Albini 480
Tel. 0541/956034-957884
Fax 0541/956341
47842 S. GIOVANNI IN M. (RN)
e-mail: mtma@mtmarchetti.com
http://www.mtmarchetti.com

MT®

PAGINA CMZ020-2-01

Subject to change without notice.

04/2022

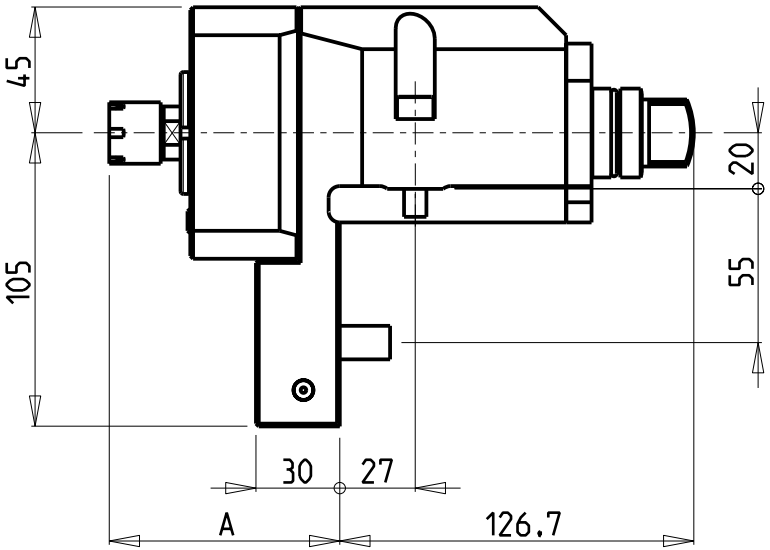

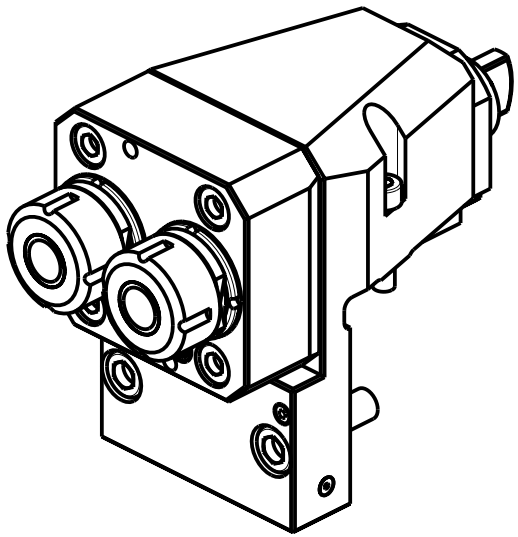

ATTENZIONE - ATTENTION - ACHTUNG

- Per lo smontaggio degli utensili utilizzare sempre la chiave di contrasto come indicato nel manuale d'uso.
- For disassembly of the tools use always the contrast key as mentioned in the user instructions.
- Fuer das Abmontieren der Werkzeuge immer den Gegenschluessel benutzen wie in der Bedienungsanleitung erwaehnt.

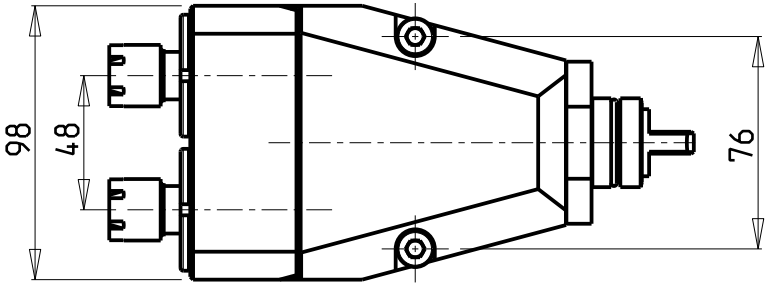

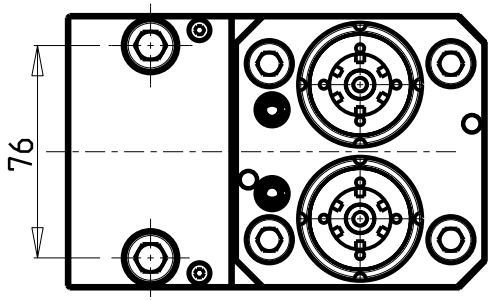

Cod. MT	Mandrino Spindle Spindel	I	RPM	Coppia Max Max Torque Max Drehmoment	Lubrificazione est. Ext. coolant Aussenkuehlung	A	CHIAVI NON INCLUSE Keys not included Schluessel nicht einbegriffen	
M0300016	ER16	1:1	6000	30Nm	X	82.5	CHUB17	CHMNER16
M0300025	ER25	1:1	6000	30Nm	X	82.96	MNL0210007	CHSTER25

CMZ

MOD: TA15-20-25-30M/Y/MS/MY/YS - TC15-20-25-30-35M/Y/MS/MY/YS - TD15-20-25-30-35-45-55M/Y/MS/MY/YS

MODULO MOTORIZZATO RADIALE 2 USCITE IN Y
Radial single side twin head driven tool in Y
Radial angetriebenes Werkzeug 2 Ausgaenge in Y

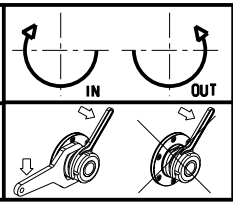

M.T. srl
Via Casino Albini 480
Tel. 0541/956034-957884
Fax 0541/956341
47842 S. GIOVANNI IN M. (RN)
e-mail: mtma@mtmarchetti.com
http://www.mtmarchetti.com

MT®

PAGINA CMZ080-2-00

Subject to change without notice.

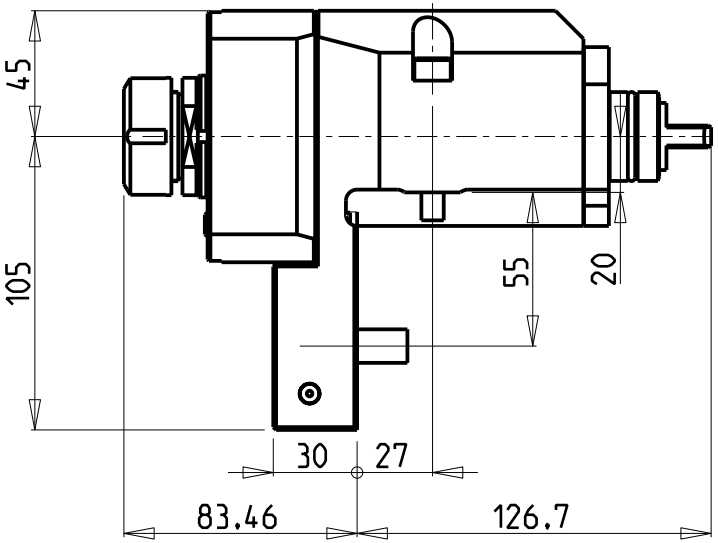

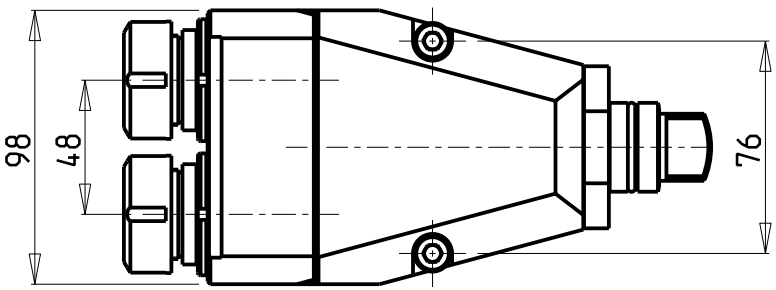

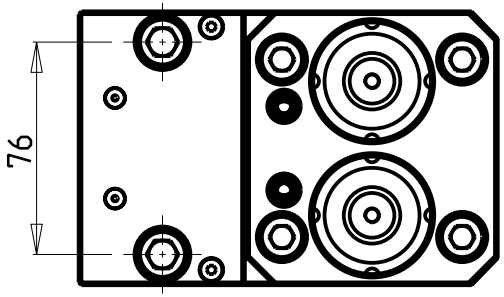

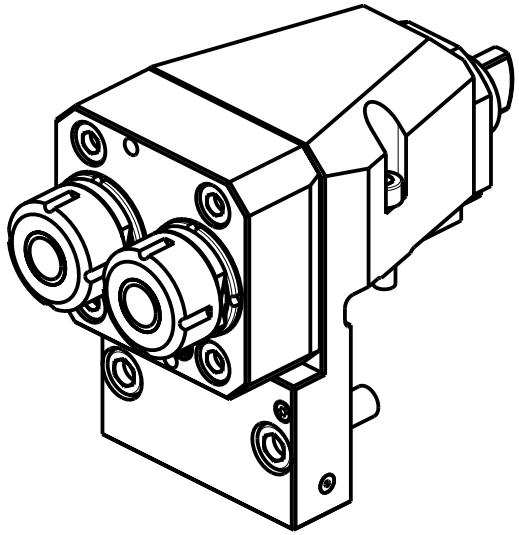

ATTENZIONE - ATTENTION - ACHTUNG

- Per lo smontaggio degli utensili utilizzare sempre la chiave di contrasto come indicato nel manuale d'uso.
- For disassembly of the tools use always the contrast key as mentioned in the user instructions.
- Fuer das Abmontieren der Werkzeuge immer den Gegenschluessel benutzen wie in der Bedienungsanleitung erwaehnt.

Cod. MT	Mandrino Spindle Spindel	I	RPM	Coppia Max Max Torque Max Drehmoment	Lubrificazione est. Ext. coolant Aussenkuehlung	CHIAVI NON INCLUSE Keys not included Schluessel nicht einbegriffen	
MSL0470225	ER25	1:1	12000	30Nm	X	MNL0210007	CHSTER25

CMZ

MOD: TA15-20-25-30M/Y/MS/MY/YS - TC15-20-25-30-35M/Y/MS/MY/YS - TD15-20-25-30-35-45-55M/Y/MS/MY/YS

MODULO MOTORIZZATO RADIALE 2 USCITE IN Y 12000 RPM
Radial single side twin head driven tool in Y 12000 rpm
Radial angetriebenes Werkzeug 2 Ausgaenge in Y 12000 rpm

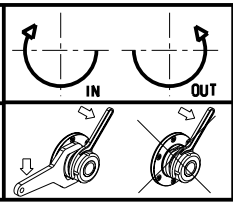

M.T. srl
Via Casino Albini 480
Tel. 0541/956034-957884
Fax 0541/956341
47842 S. GIOVANNI IN M. (RN)
e-mail: mtma@mtmarchetti.com
http://www.mtmarchetti.com

MT®

Subject to change without notice.

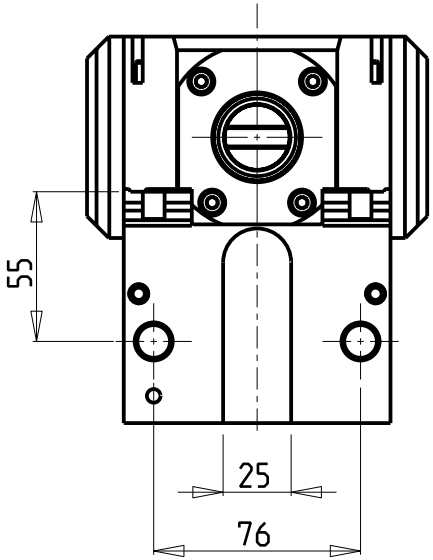

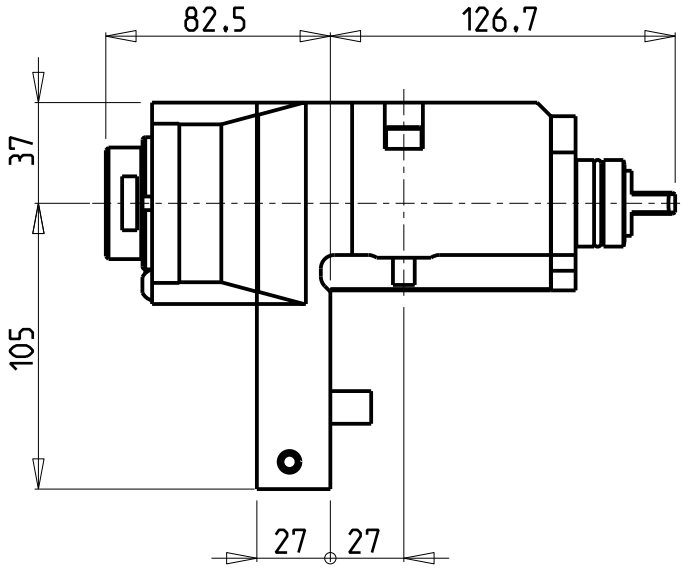

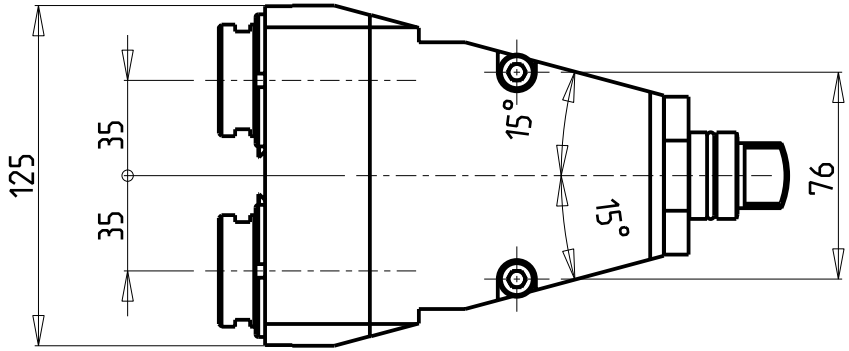

ATTENZIONE - ATTENTION - ACHTUNG

- Per lo smontaggio degli utensili utilizzare sempre la chiave di contrasto come indicato nel manuale d'uso.
- For disassembly of the tools use always the contrast key as mentioned in the user instructions.
- Fuer das Abmontieren der Werkzeuge immer den Gegenschluessel benutzen wie in der Bedienungsanleitung erwaehnt.

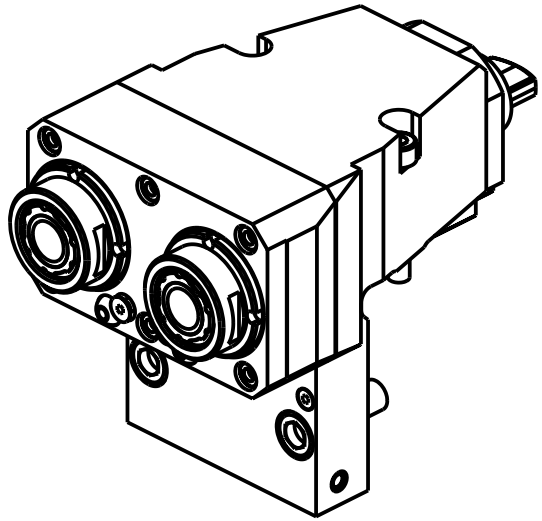

Cod. MT	Mandrino Spindle Spindel	I	RPM	Coppia Max Max Torque Max Drehmoment	Lubrificazione est. Ext. coolant Aussenkuehlung	CHIAVI NON INCLUSE Keys not included Schluessel nicht einbegriffen		
MSL0630225	ERA25	1:1	12000	40Nm	X	CHUB27	CHUB36	CHTAER25ZC •

• Chiave inclusa
• Key included
• Schluessel inbegriffen

CMZ

MOD: TA15-20-25-30M/Y/MS/MY/YS - TC15-20-25-30-35M/Y/MS/MY/YS - TD15-20-25-30-35-45-55M/Y/MS/MY/YS

MODULO MOTORIZZATO RADIALE 2 USCITE IN Y 12000 RPM
Radial single side twin head driven tool in Y 12000 rpm
Radial angetriebenes Werkzeug 2 Ausgaenge in Y 12000 rpm

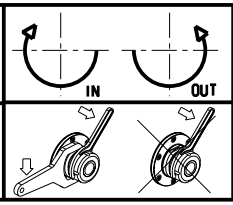

M.T. srl
Via Casino Albini 480
Tel. 0541/956034-957884
Fax 0541/956341
47842 S. GIOVANNI IN M. (RN)
e-mail: mtma@mtmarchetti.com
http://www.mtmarchetti.com

MT®

Subject to change without notice.

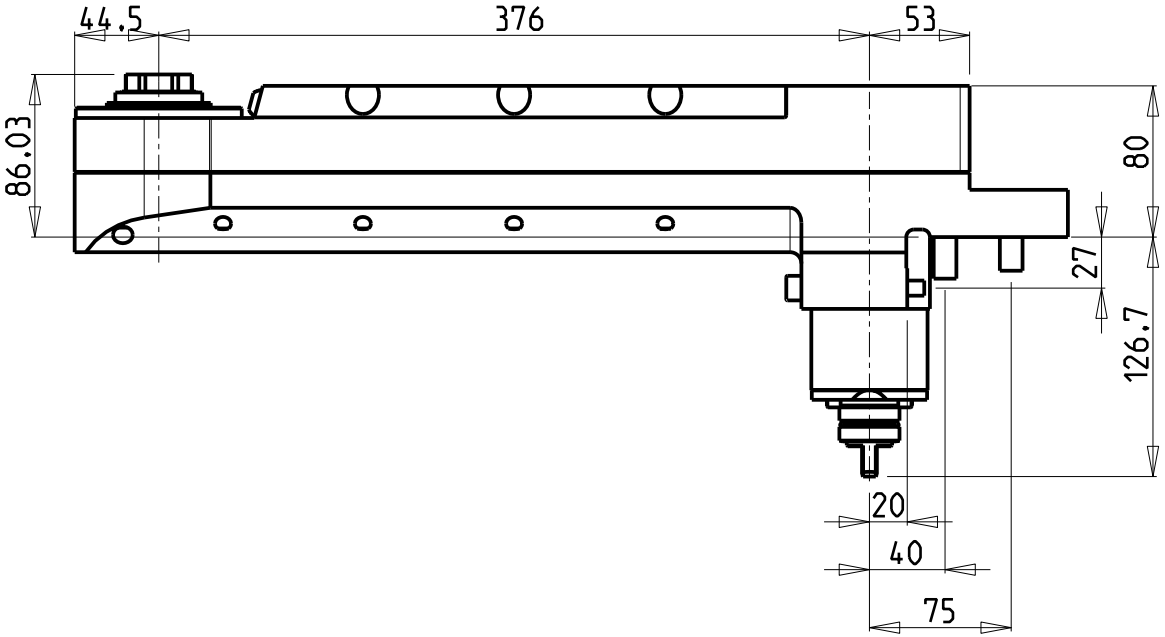

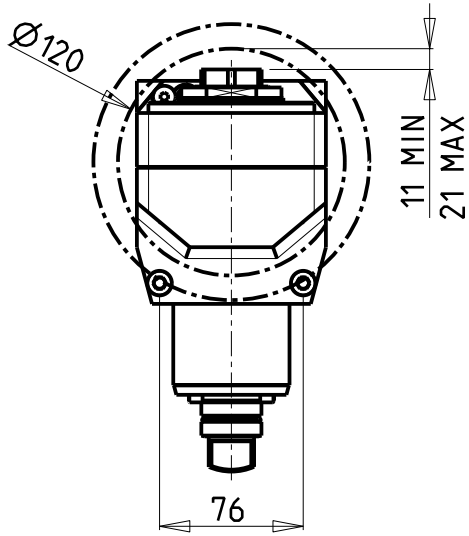

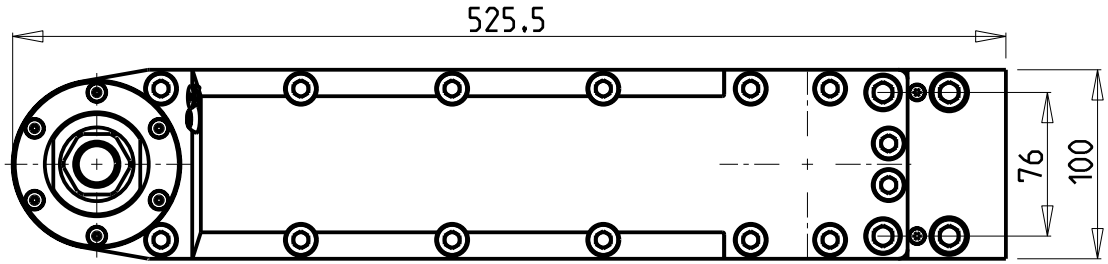

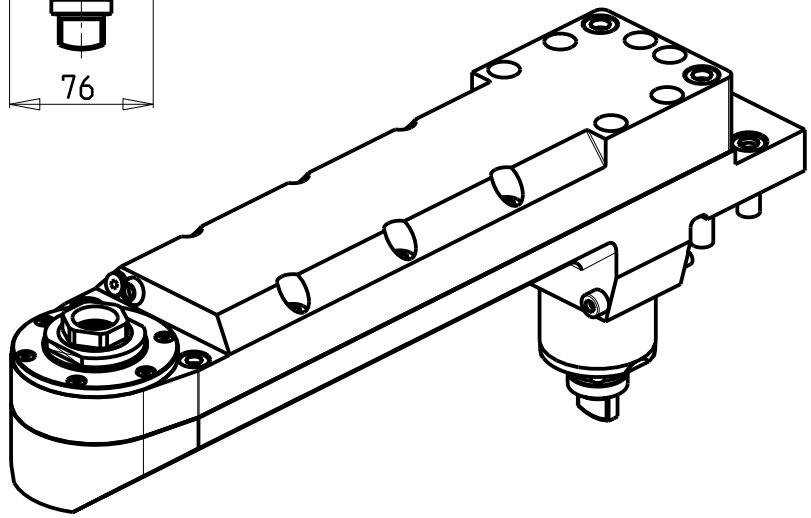

Cod. MT	Mandrino Spindle Spindel	I	RPM	Coppia Max Max Torque Max Drehmoment	Lubrificazione est. Ext. coolant Aussenkuehlung	CHIAVI INCLUSE Keys included Schluessel inbegriffen	
MSL0010132	ER A 32	1:1	6000	50Nm	X	CHUB46	CHUB32

CMZ

MOD:TL25AM/AMS/BM/BMS - TL20M/MS/TM - TA15-20-25-30M/Y/MS/MY/YS - TC15-20-25-30-35M/Y/MS/MY/YS
TD15-20-25-30-35-45-55M/Y/MS/MY/YS

MODULO MOTORIZZATO SPECIALE RADIALE DISASSATO IN Z 376mm
Radial special driven tool re-directed in Z by 376mm
Radial spezial angetriebenes Werkzeug achsversetzt in Z um 376mm

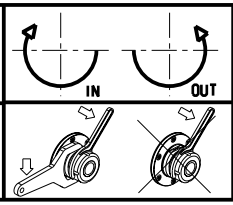

M.T. srl
Via Casino Albini 480
Tel. 0541/956034-957884
Fax 0541/956341
47842 S. GIOVANNI IN M. (RN)
e-mail: mtma@mtmarchetti.com
http://www.mtmarchetti.com

MT®

Subject to change without notice.

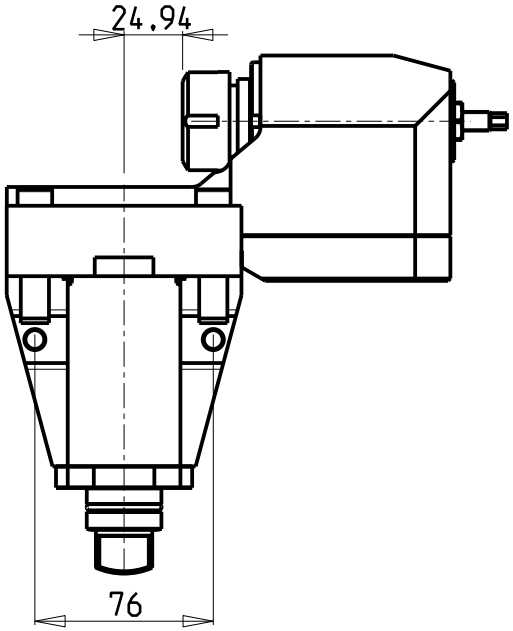

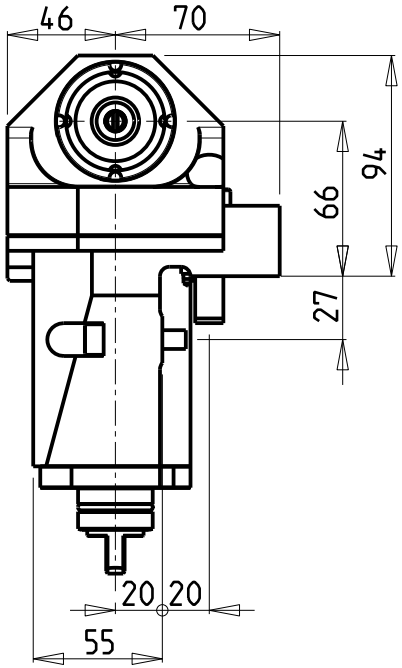

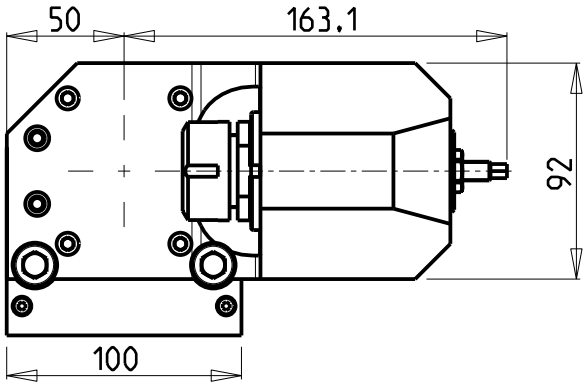

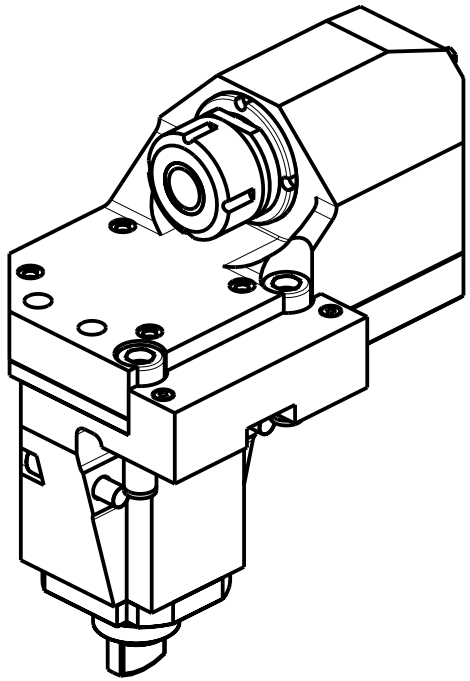

Cod. MT	Mandrino Spindle Spindel	I	RPM	Coppia Max Max Torque Max Drehmoment	Lubrificazione est. Ext. coolant Aussenkuehlung	CHIAVI NON INCLUSE Keys not included Schluessel nicht einbegriffen	
M0230025	ER 25	1:1	6000	40Nm	X	CHUB36	CHSTER25

CMZ

MOD:TL25AM/AMS/BM/BMS - TL20M/MS/TM - TA15-20-25-30M/Y/MS/MY/YS - TC15-20-25-30-35M/Y/MS/MY/YS
TD15-20-25-30-35-45-55M/Y/MS/MY/YS

MODULO MOTORIZZATO SPECIALE RADIALE IN Y
Radial special driven tool in Y
Radial spezial angetriebenes Werkzeug in Y

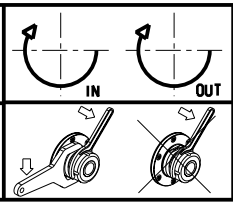

M.T. srl
Via Casino Albini 480
Tel. 0541/956034-957884
Fax 0541/956341
47842 S. GIOVANNI IN M. (RN)
e-mail: mtma@mtmarchetti.com
http://www.mtmarchetti.com

MT®

PAGINA CMZ130-2-00

Subject to change without notice.

04/2022

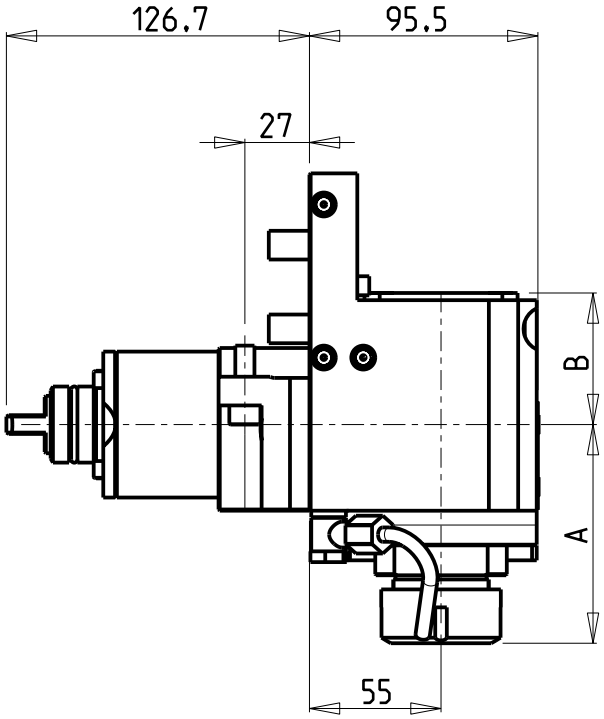

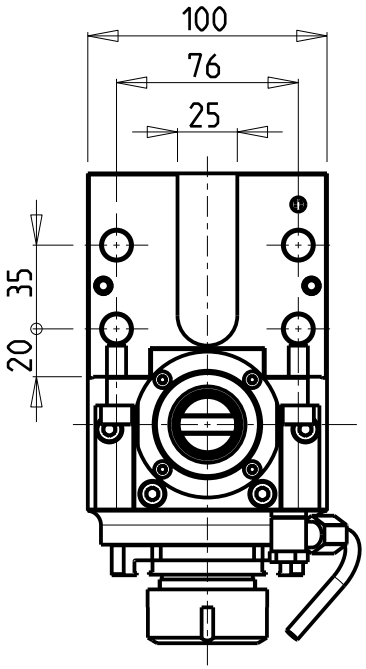

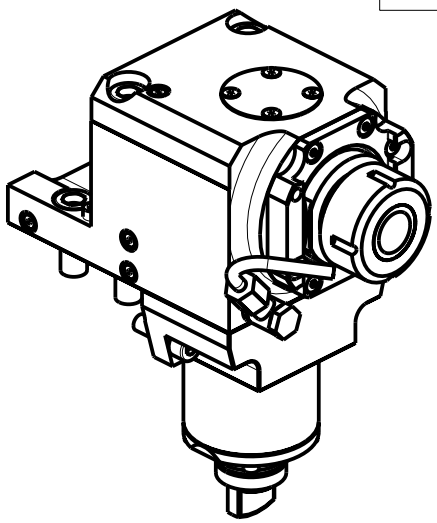

ATTENZIONE - ATTENTION - ACHTUNG

- Per lo smontaggio degli utensili utilizzare sempre la chiave di contrasto come indicato nel manuale d'uso.
- For disassembly of the tools use always the contrast key as mentioned in the user instructions.
- Fuer das Abmontieren der Werkzeuge immer den Gegenschluessel benutzen wie in der Bedienungsanleitung erwaehnt.

Cod. MT	Mandrino Spindle Spindel	I	RPM	Coppia Max Max Torque Max Drehmoment	Lubrificazione int. Coolant through Innenkuehlung	Lubrificazione est. Ext. coolant Aussenkuehlung	A	B	CHIAVI NON INCLUSE Keys not included Schluessel nicht einbegriffen	
MSL0160132	ER32	1:1	6000	105Nm	-	X	91.41	55	MNZ0410005 *	CHSTER32
MSL0160232	ER32	1:1	6000	105Nm	P=70bar	X	91.41	67.5	MNZ0410005 *	CHSTER32
MSL0160125	ER25	1:1	6000	105Nm	-	X	88.41	55	MNZ0410005 *	CHSTER25
MSL0160225	ER25	1:1	6000	105Nm	P=70bar	X	88.41	67.5	MNZ0410005 *	CHSTER25

- Chiave inclusa
- Key included
- Schluessel inbegriffen

CMZ

MOD:TL25AM/AMS/BM/BMS - TL20M/MS/TM - TA15-20-25-30M/Y/MS/MY/YS - TC15-20-25-30-35M/Y/MS/MY/YS
TD15-20-25-30-35-45-55M/Y/MS/MY/YS

MODULO MOTORIZZATO ASSIALE H=55mm
Axial driven tool H=55mm
Axial angetriebenes Werkzeug H=55mm

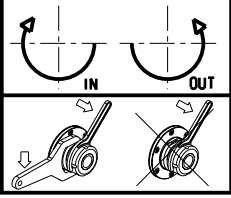

M.T. srl
Via Casino Albini 480
Tel. 0541/956034-957884
Fax 0541/956341
47842 S. GIOVANNI IN M. (RN)
e-mail: mtma@mtmarchetti.com
http://www.mtmarchetti.com

MT®

Subject to change without notice.

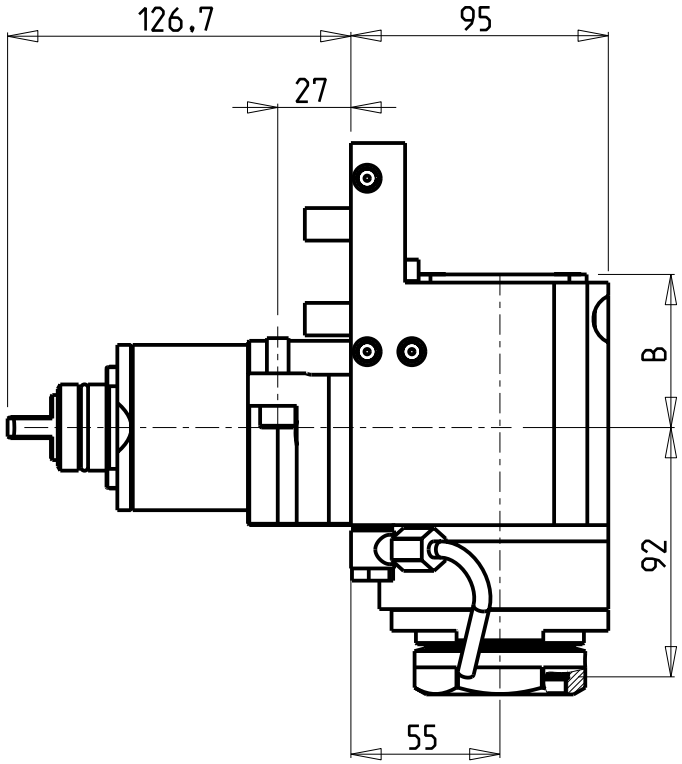

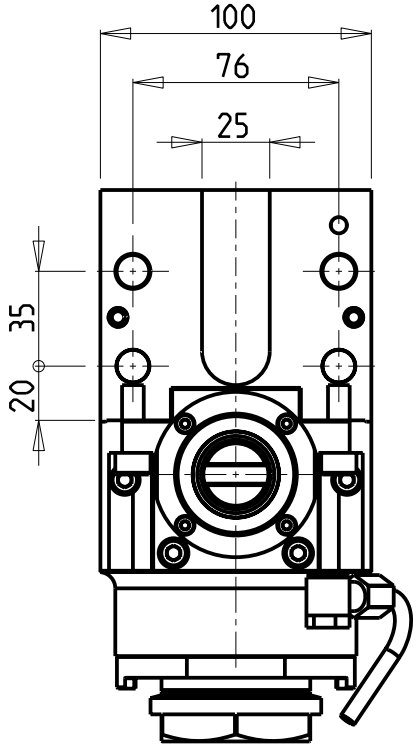

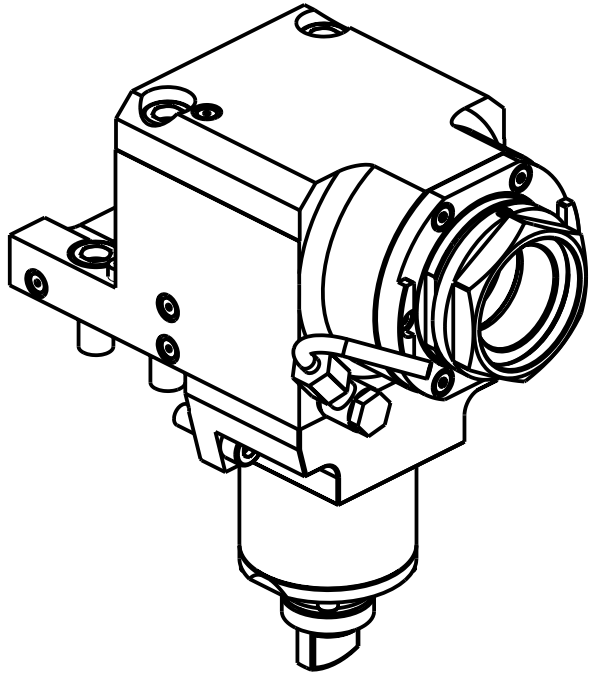

PER PORTAUTENSILI MODULARI MTSK-50 VEDI PAG. TBL300-1-50
FOR MTSK-50 QUIK CHANGE TOOLHOLDERS CLAMPINGS SEE PAGE TBL300-1-50
FUER MTSK-50 MODULARE WERKZEUGAUFNAHMEN SIEHE SEITE TBL300-1-50

Cod. MT	Mandrino Spindle Spindel	I	RPM	Coppia Max Max Torque Max Drehmoment	Lubr.interna Coolant through Innenkuehlung	Lubr.esterna Ext. coolant Aussenkuehlung	B	CHIAVI NON INCLUSE Keys not included Schluessel nicht einbegriffen	
MSL0370150	MTSK-50	1:1	6000	105Nm	-	X	56.5	CHUB55	OKU0430007 •
MSL0370250	MTSK-50	1:1	6000	105Nm	P=70bar	X	69	CHUB55	OKU0430007 •

• Chiave inclusa
• Key included
• Schluessel inbegriffen

CMZ

MOD:TL25AM/AMS/BM/BMS - TL20M/MS/TM - TA15-20-25-30M/Y/MS/MY/YS - TC15-20-25-30-35M/Y/MS/MY/YS
TD15-20-25-30-35-45-55M/Y/MS/MY/YS

MODULO MOTORIZZATO ASSIALE MTSK
Axial MTSK driven tool
Axial MTSK angetriebenes Werkzeug

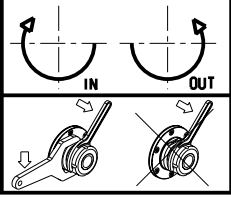

M.T. srl
Via Casino Albini 480
Tel. 0541/956034-957884
Fax 0541/956341
47842 S. GIOVANNI IN M. (RN)
e-mail: mtma@mtmarchetti.com
http://www.mtmarchetti.com

PAGINA CMZ150-2-10-K

Subject to change without notice.

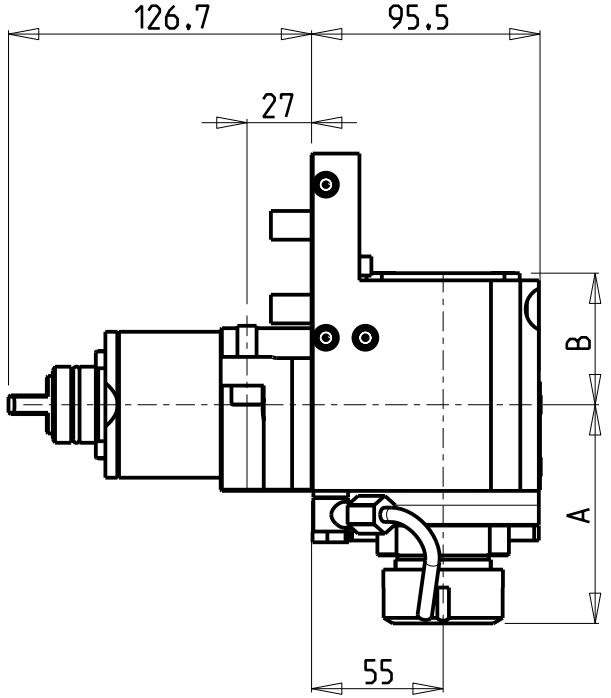

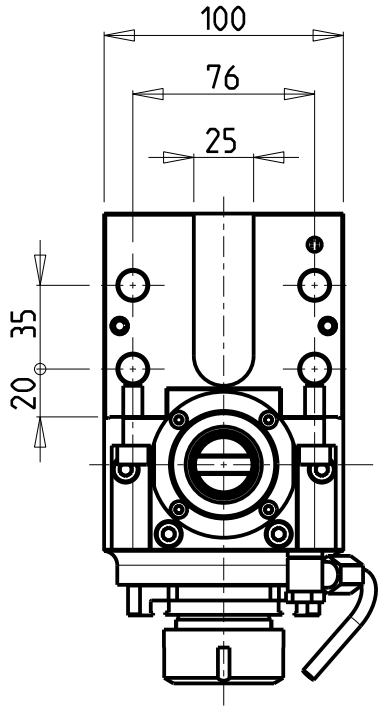

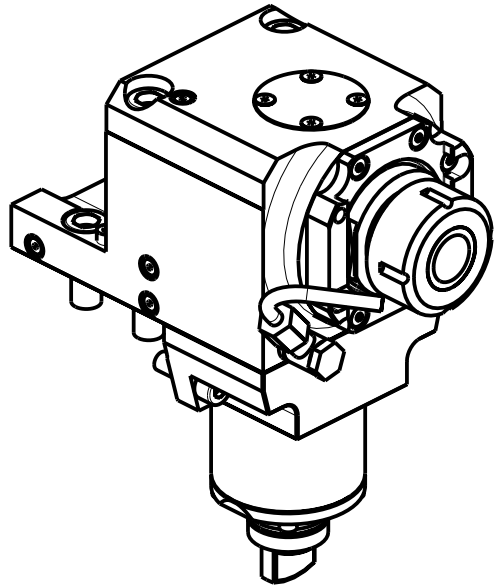

Cod. MT	Mandrino Spindle Spindel	I	RPM	Coppia Max Max Torque Max Drehmoment	Lubrificazione int. Coolant through Innenkuehlung	Lubrificazione est. Ext. coolant Aussenkuehlung	A	B	CHIAVI NON INCLUSE Keys not included Schluessel nicht einbegriffen	
MSL0260125	ER25	1:1	12000	105Nm	-	X	88.41	55	MNZ0410005 •	CHSTER25
MSL0260225	ER25	1:1	12000	105Nm	P=70bar	X	88.41	67.5	MNZ0410005 •	CHSTER25
MSL0260132	ER32	1:1	12000	105Nm	-	X	91.41	55	MNZ0410005 •	CHSTER32
MSL0260232	ER32	1:1	12000	105Nm	P=70bar	X	91.41	67.5	MNZ0410005 •	CHSTER32

• Chiave inclusa
• Key included
• Schluessel inbegriffen

CMZ

MOD:TL25AM/AMS/BM/BMS - TL20M/MS/TM - TA15-20-25-30M/Y/MS/MY/YS - TC15-20-25-30-35M/Y/MS/MY/YS
TD15-20-25-30-35-45-55M/Y/MS/MY/YS

MODULO MOTORIZZATO ASSIALE 12000 RPM
Axial driven tool 12000 rpm
Axial angetriebenes Werkzeug 12000 rpm

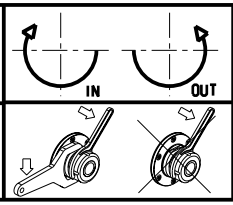

M.T. srl
Via Casino Albini 480
Tel. 0541/956034-957884
Fax 0541/956341
47842 S. GIOVANNI IN M. (RN)
e-mail: mtma@mtmarchetti.com
http://www.mtmarchetti.com

MT®

Subject to change without notice.

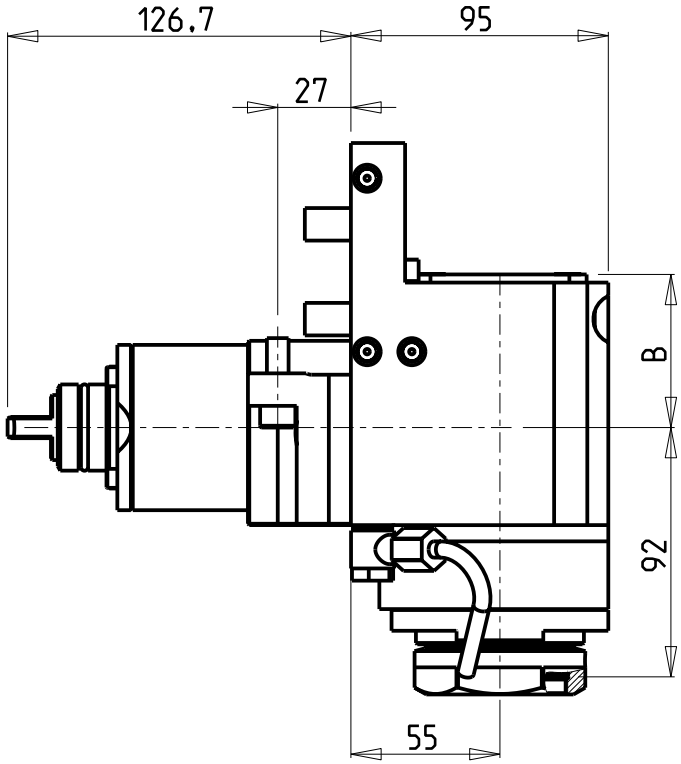

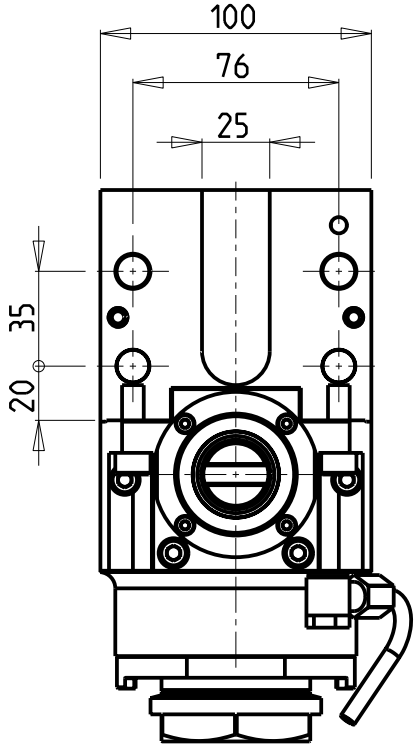

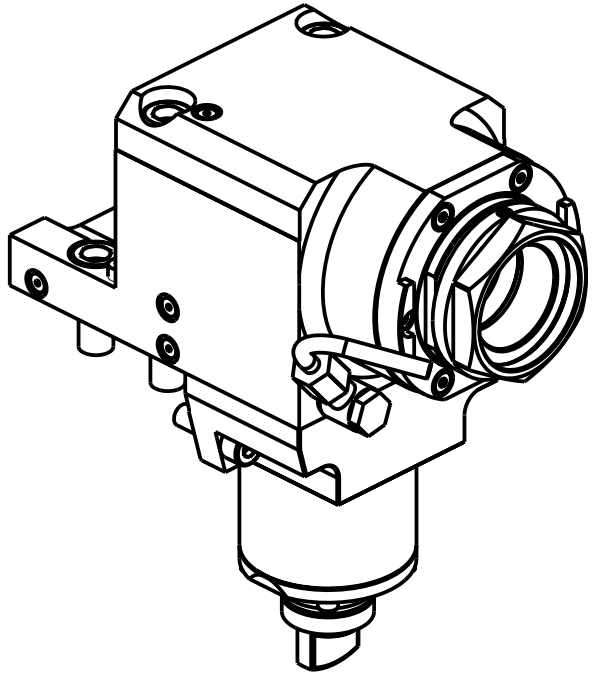

PER PORTAUTENSILI MODULARI MTSK-50 VEDI PAG. TBL300-1-50
FOR MTSK-50 QUIK CHANGE TOOLHOLDERS CLAMPINGS SEE PAGE TBL300-1-50
FUER MTSK-50 MODULARE WERKZEUGAUFNAHMEN SIEHE SEITE TBL300-1-50

Cod. MT	Mandrino Spindle Spindel	I	RPM	Coppia Max Max Torque Max Drehmoment	Lubr.interna Coolant through Innenkuehlung	Lubr.esterna Ext. coolant Aussenkuehlung	B	CHIAVI NON INCLUSE Keys not included Schluessel nicht einbegriffen	
MSL0300150	MTSK-50	1:1	12000	105Nm	-	X	56.5	CHUB55	OKU0430007 •
MSL0300250	MTSK-50	1:1	12000	105Nm	P=70bar	X	69	CHUB55	OKU0430007 •

• Chiave inclusa
• Key included
• Schluessel inbegriffen

CMZ

MOD:TL25AM/AMS/BM/BMS - TL20M/MS/TM - TA15-20-25-30M/Y/MS/MY/YS - TC15-20-25-30-35M/Y/MS/MY/YS
TD15-20-25-30-35-45-55M/Y/MS/MY/YS

MODULO MOTORIZZATO ASSIALE MTSK 12000 RPM
Axial MTSK driven tool 12000 rpm
Axial MTSK angetriebenes Werkzeug 12000 rpm

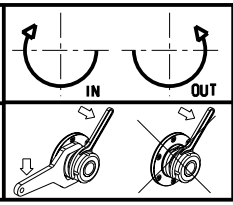

M.T. srl
Via Casino Albini 480
Tel. 0541/956034-957884
Fax 0541/956341
47842 S. GIOVANNI IN M. (RN)
e-mail: mtma@mtmarchetti.com
http://www.mtmarchetti.com

MT®

PAGINA CMZ150-2-11-K

Subject to change without notice.

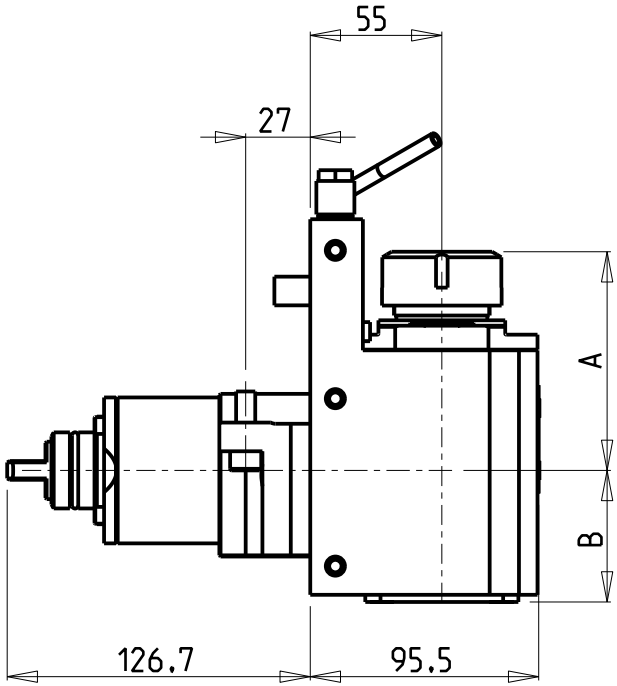

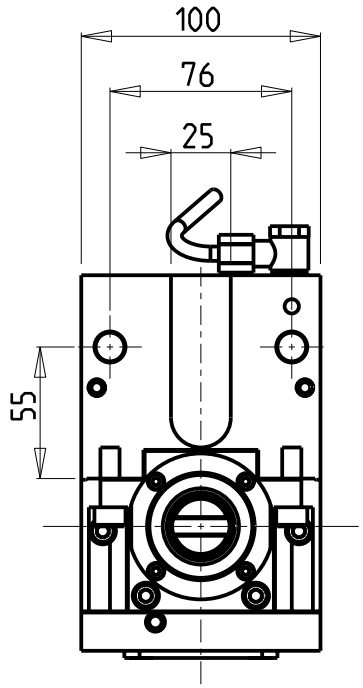

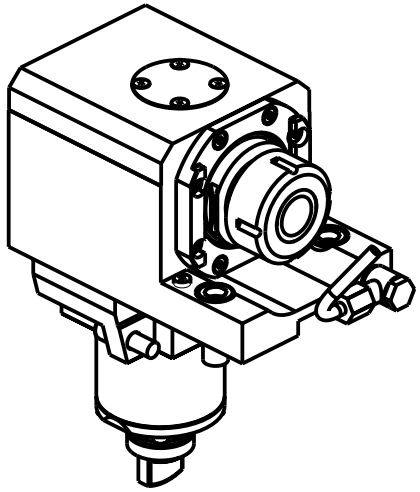

ATTENZIONE - ATTENTION - ACHTUNG

- Per lo smontaggio degli utensili utilizzare sempre la chiave di contrasto come indicato nel manuale d'uso.
- For disassembly of the tools use always the contrast key as mentioned in the user instructions.
- Fuer das Abmontieren der Werkzeuge immer den Gegenschluessel benutzen wie in der Bedienungsanleitung erwaehnt.

Cod. MT	Mandrino Spindle Spindel	I	RPM	Coppia Max Max Torque Max Drehmoment	Lubrificazione int. Coolant through Innenkuehlung	Lubrificazione est. Ext. coolant Aussenkuehlung	A	B	CHIAVI NON INCLUSE Keys not included Schluessel nicht einbegriffen	
MSL0570132	ER32	1:1	6000	105Nm	-	X	91.41	55	MNZ0410005 *	CHSTER32
MSL0570232	ER32	1:1	6000	105Nm	P=70bar	X	91.41	67.5	MNZ0410005 *	CHSTER32
MSL0570125	ER25	1:1	6000	105Nm	-	X	88.41	55	MNZ0410005 *	CHSTER25
MSL0570225	ER25	1:1	6000	105Nm	P=70bar	X	88.41	67.5	MNZ0410005 *	CHSTER25

- Chiave inclusa
- Key included
- Schluessel inbegriffen

CMZ

MOD:TL25AM/AMS/BM/BMS - TL20M/MS/TM - TA15-20-25-30M/Y/MS/MY/YS - TC15-20-25-30-35M/Y/MS/MY/YS
TD15-20-25-30-35-45-55M/Y/MS/MY/YS

MODULO MOTORIZZATO ASSIALE PER CONTROMANDRINO H=55mm
Axial driven tool for subspindle H=55mm
Axial angetriebenes Werkzeug fuer Gegenspindel H=55mm

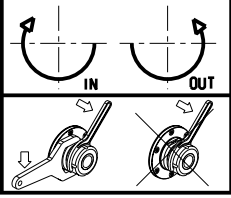

M.T. srl
Via Casino Albini 480
Tel. 0541/956034-957884
Fax 0541/956341
47842 S. GIOVANNI IN M. (RN)
e-mail: mtma@mtmarchetti.com
http://www.mtmarchetti.com

MT®

Subject to change without notice.

04/2022

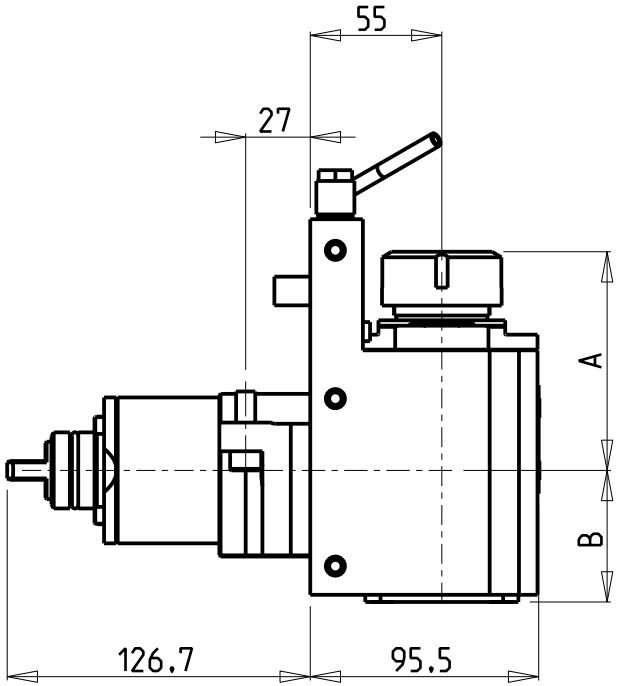

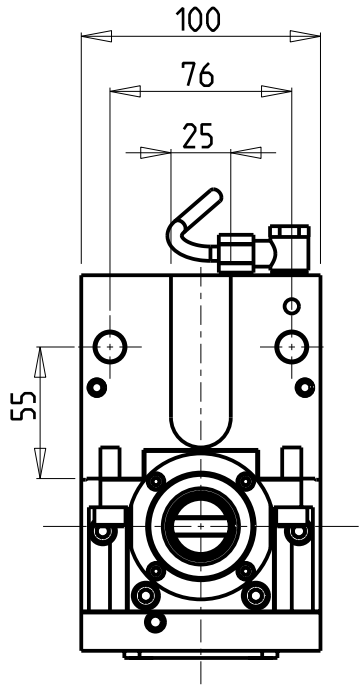

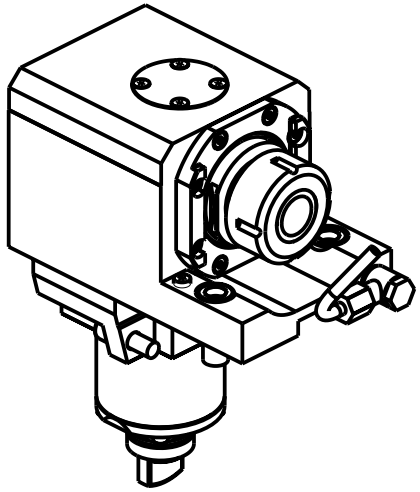

ATTENZIONE - ATTENTION - ACHTUNG

- Per lo smontaggio degli utensili utilizzare sempre la chiave di contrasto come indicato nel manuale d'uso.
- For disassembly of the tools use always the contrast key as mentioned in the user instructions.
- Fuer das Abmontieren der Werkzeuge immer den Gegenschluessel benutzen wie in der Bedienungsanleitung erwaehnt.

Cod. MT	Mandrino Spindle Spindel	I	RPM	Coppia Max Max Torque Max Drehmoment	Lubrificazione int. Coolant through Innenkuehlung	Lubrificazione est. Ext. coolant Aussenkuehlung	A	B	CHIAVI NON INCLUSE Keys not included Schluessel nicht einbegriffen	
MSL0580132	ER32	1:1	12000	105Nm	-	X	91.41	55	MNZ0410005 *	CHSTER32
MSL0580232	ER32	1:1	12000	105Nm	P=70bar	X	91.41	67.5	MNZ0410005 *	CHSTER32
MSL0580125	ER25	1:1	12000	105Nm	-	X	88.41	55	MNZ0410005 *	CHSTER25
MSL0580225	ER25	1:1	12000	105Nm	P=70bar	X	88.41	67.5	MNZ0410005 *	CHSTER25

- Chiave inclusa
- Key included
- Schluessel inbegriffen

CMZ

MOD:TL25AM/AMS/BM/BMS - TL20M/MS/TM - TA15-20-25-30M/Y/MS/MY/YS - TC15-20-25-30-35M/Y/MS/MY/YS
TD15-20-25-30-35-45-55M/Y/MS/MY/YS

MODULO MOTORIZZATO ASSIALE PER CONTROMANDRINO 12000 RPM H=55mm
Axial driven tool for subspindle 12000 rpm H=55mm
Axial angetriebenes Werkzeug fuer Gegenspindel 12000 rpm H=55mm

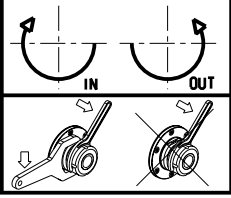

M.T. srl
Via Casino Albini 480
Tel. 0541/956034-957884
Fax 0541/956341
47842 S. GIOVANNI IN M. (RN)
e-mail: mtma@mtmarchetti.com
http://www.mtmarchetti.com

Subject to change without notice.

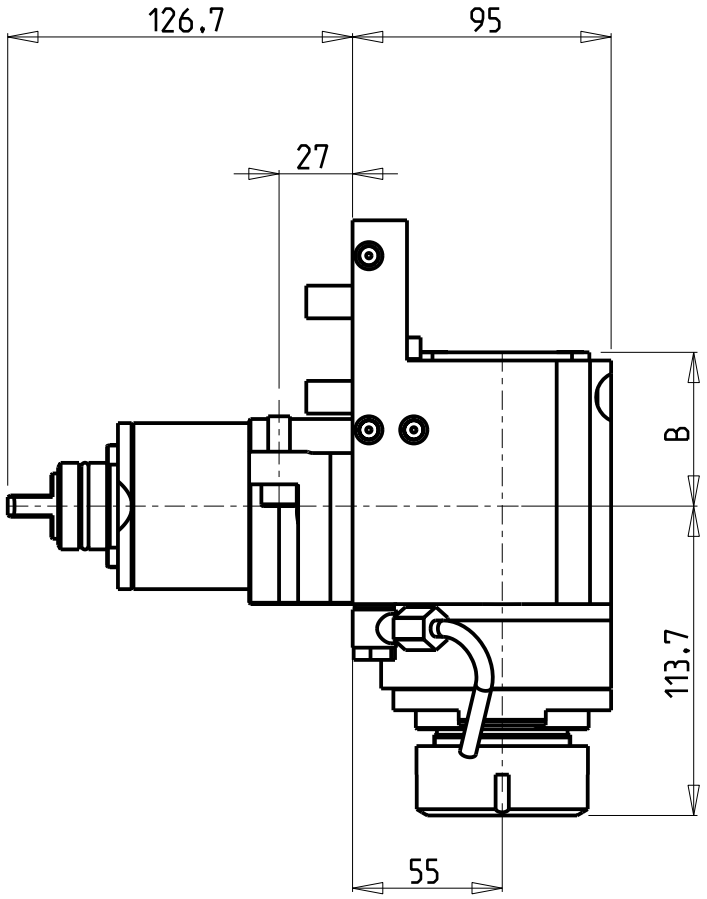

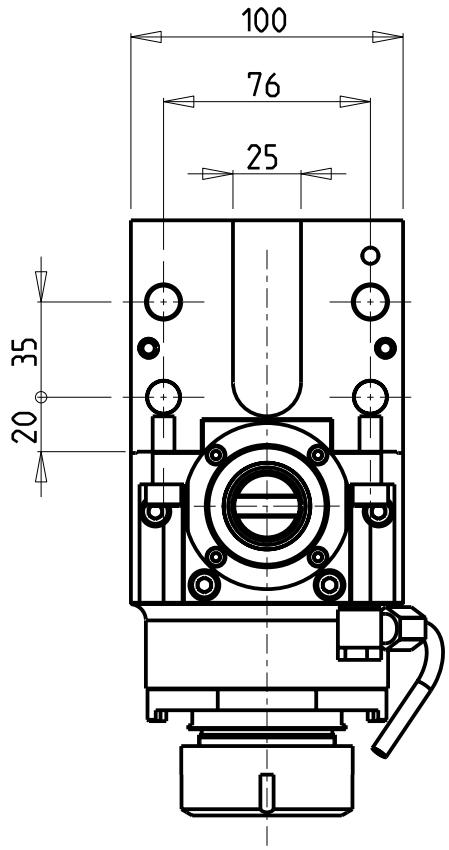

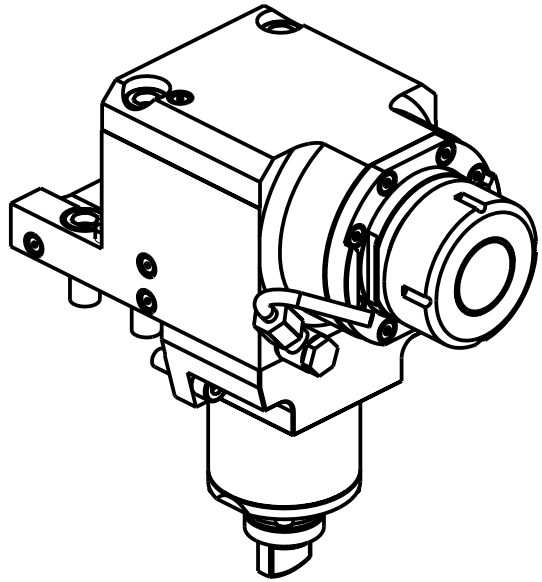

ATTENZIONE - ATTENTION - ACHTUNG

- Per lo smontaggio degli utensili utilizzare sempre la chiave di contrasto come indicato nel manuale d'uso.
- For disassembly of the tools use always the contrast key as mentioned in the user instructions.
- Fuer das Abmontieren der Werkzeuge immer den Gegenschluessel benutzen wie in der Bedienungsanleitung erwaehnt.

Cod. MT	Mandrino Spindle Spindel	I	RPM	Coppia Max Max Torque Max Drehmoment	Lubrificazione int. Coolant through Innenkuehlung	Lubrificazione est. Ext. coolant Aussenkuehlung	B	CHIAVI NON INCLUSE Keys not included Schluessel nicht einbegriffen	
MSL0480140	ER40	1:1	6000	105Nm	-	X	56.5	OKU0430007 •	CHSTER40
MSL0480240	ER40	1:1	6000	105Nm	P=70bar	X	69	OKU0430007 •	CHSTER40

• Chiave inclusa
• Key included
• Schluessel inbegriffen

CMZ

MOD:TL25AM/AMS/BM/BMS - TL20M/MS/TM - TA15-20-25-30M/Y/MS/MY/YS - TC15-20-25-30-35M/Y/MS/MY/YS
TD15-20-25-30-35-45-55M/Y/MS/MY/YS

MODULO MOTORIZZATO ASSIALE MAGGIORATO H=55mm
Axial reinforced driven tool H=55mm
Axial angetriebenes Werkzeug vergroessert H=55mm

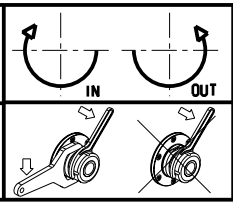

M.T. srl
Via Casino Albini 480
Tel. 0541/956034-957884
Fax 0541/956341
47842 S. GIOVANNI IN M. (RN)
e-mail: mtma@mtmarchetti.com
http://www.mtmarchetti.com

MT®

Subject to change without notice.

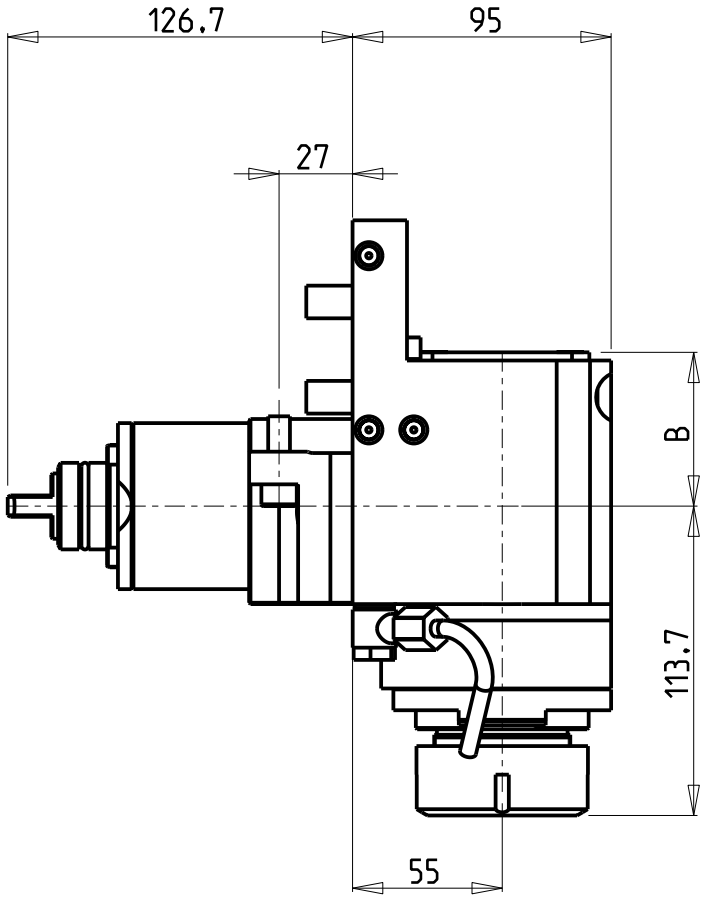

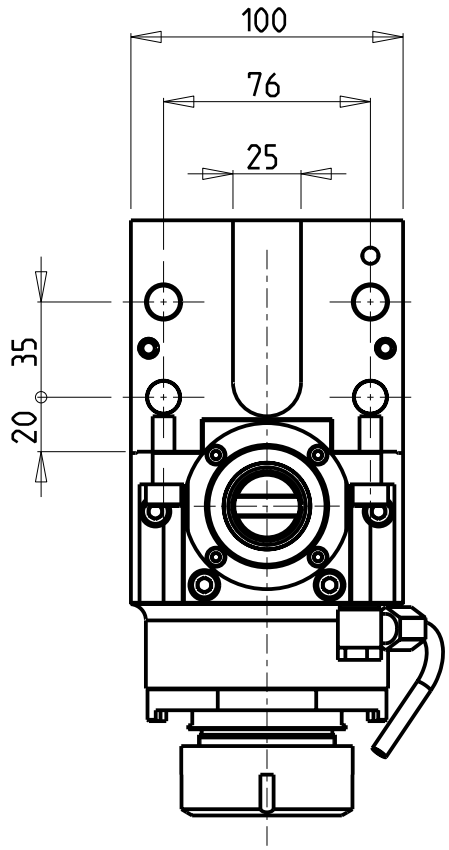

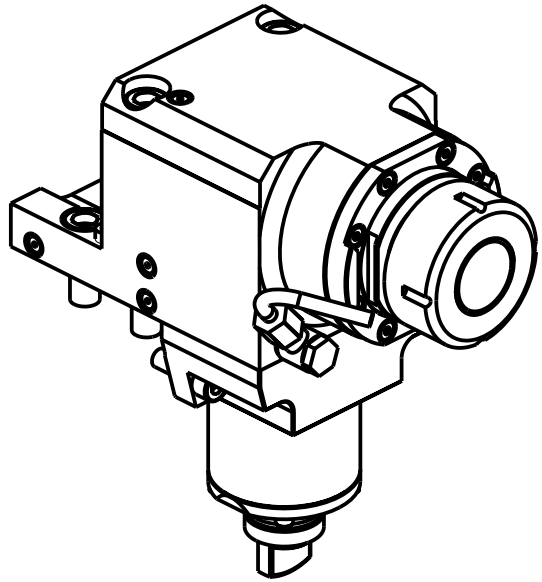

ATTENZIONE - ATTENTION - ACHTUNG

- Per lo smontaggio degli utensili utilizzare sempre la chiave di contrasto come indicato nel manuale d'uso.
- For disassembly of the tools use always the contrast key as mentioned in the user instructions.
- Fuer das Abmontieren der Werkzeuge immer den Gegenschluessel benutzen wie in der Bedienungsanleitung erwaehnt.

Cod. MT	Mandrino Spindle Spindel	I	RPM	Coppia Max Max Torque Max Drehmoment	Lubrificazione int. Coolant through Innenkuehlung	Lubrificazione est. Ext. coolant Aussenkuehlung	B	CHIAVI NON INCLUSE Keys not included Schluessel nicht einbegriffen	
MSL0490140	ER40	1:1	12000	105Nm	-	X	56.5	OKU0430007 •	CHSTER40
MSL0490240	ER40	1:1	12000	105Nm	P=70bar	X	69	OKU0430007 •	CHSTER40

- Chiave inclusa
- Key included
- Schluessel inbegriffen

CMZ

MOD:TL25AM/AMS/BM/BMS - TL20M/MS/TM - TA15-20-25-30M/Y/MS/MY/YS - TC15-20-25-30-35M/Y/MS/MY/YS
TD15-20-25-30-35-45-55M/Y/MS/MY/YS

MODULO MOTORIZZATO ASSIALE MAGGIORATO 12000 RPM H=55mm
Axial reinforced driven tool 12000 rpm H=55mm
Axial angetriebenes Werkzeug vergroessert 12000 rpm H=55mm

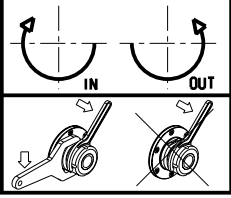

M.T. srl
Via Casino Albini 480
Tel. 0541/956034-957884
Fax 0541/956341
47842 S. GIOVANNI IN M. (RN)
e-mail: mtma@mtmarchetti.com
http://www.mtmarchetti.com

MT®

Subject to change without notice.

ATTENZIONE - ATTENTION - ACHTUNG

- Per lo smontaggio degli utensili utilizzare sempre la chiave di contrasto come indicato nel manuale d'uso.
- For disassembly of the tools use always the contrast key as mentioned in the user instructions.
- Fuer das Abmontieren der Werkzeuge immer den Gegenschluessel benutzen wie in der Bedienungsanleitung erwaehnt.

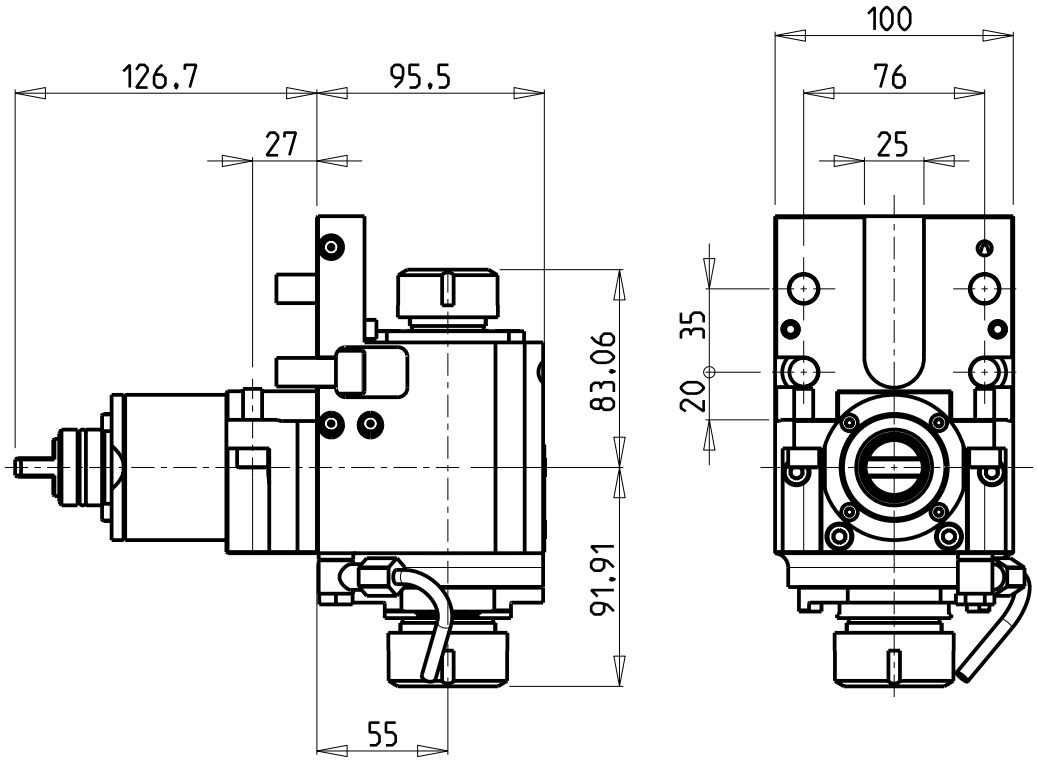

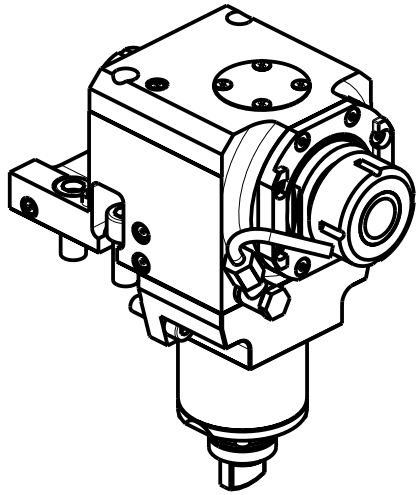

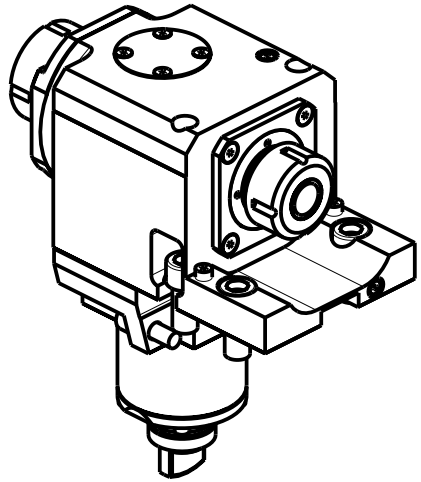

Cod. MT	Mandrino Spindle Spindel	I	RPM	Coppia Max Max Torque Max Drehmoment	Lubrificazione est. Ext. coolant Aussenkuehlung	CHIAVI NON INCLUSE Keys not included Schluessel nicht einbegriffen		
MSL0173225	ER32+ER25	1:1	6000	105Nm	X	MNZ0410005 •	CHSTER32	CHSTER25

• Chiave inclusa
• Key included
• Schluessel inbegriffen

CMZ

MOD:TL25AM/AMS/BM/BMS - TL20M/MS/TM - TA15-20-25-30M/Y/MS/MY/YS - TC15-20-25-30-35M/Y/MS/MY/YS
TD15-20-25-30-35-45-55M/Y/MS/MY/YS

MODULO MOTORIZZATO ASSIALE BISPORGENTE
Axial opposite face twin driven tool
Axial angetriebenes Werkzeug halb vorspringend

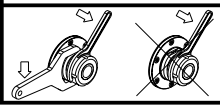

M.T. srl
Via Casino Albini 480
Tel. 0541/956034-957884
Fax 0541/956341
47842 S. GIOVANNI IN M. (RN)
e-mail: mtma@mtmarchetti.com
http://www.mtmarchetti.com

Subject to change without notice.

ATTENZIONE - ATTENTION - ACHTUNG

- Per lo smontaggio degli utensili utilizzare sempre la chiave di contrasto come indicato nel manuale d'uso.
- For disassembly of the tools use always the contrast key as mentioned in the user instructions.
- Fuer das Abmontieren der Werkzeuge immer den Gegenschluessel benutzen wie in der Bedienungsanleitung erwaehnt.

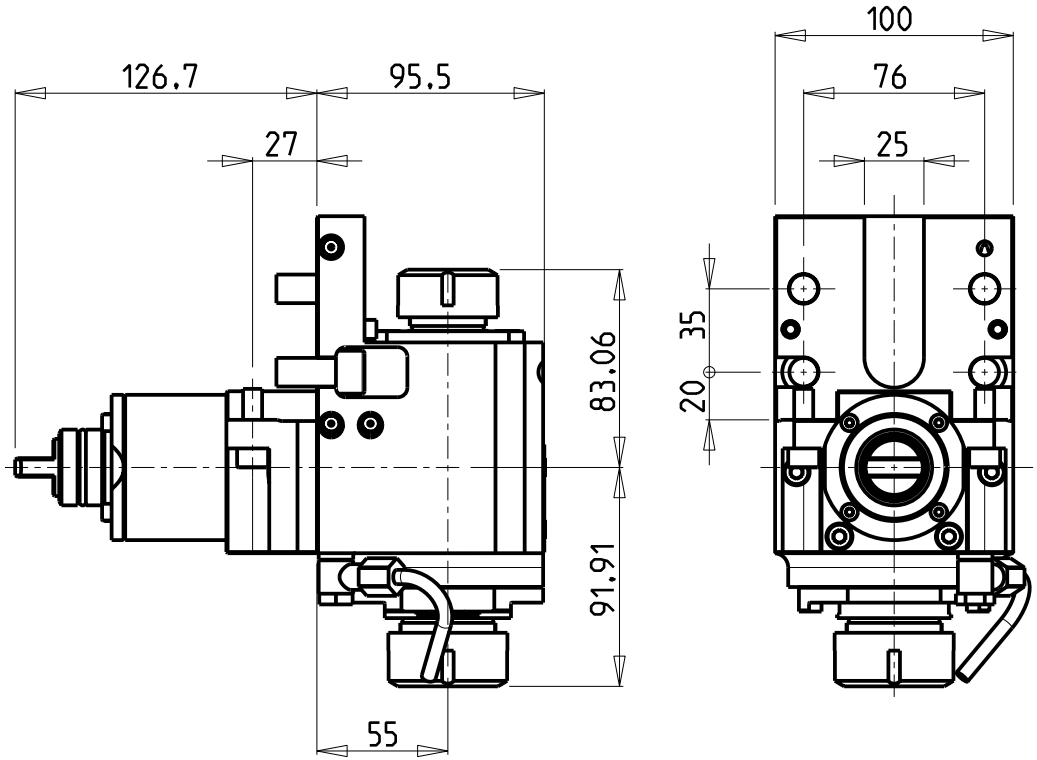

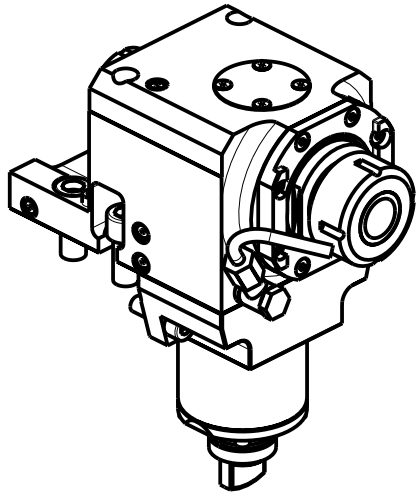

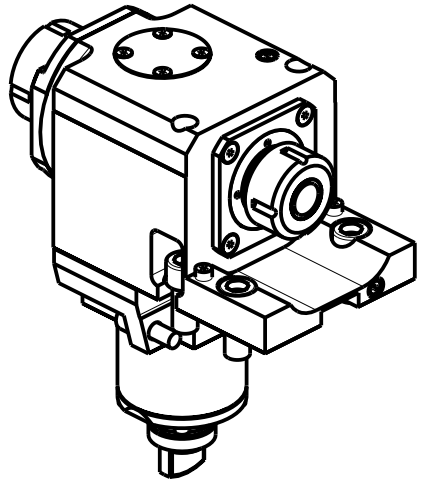

Cod. MT	Mandrino Spindle Spindel	I	RPM	Coppia Max Max Torque Max Drehmoment	Lubrificazione est. Ext. coolant Aussenkuehlung	CHIAVI NON INCLUSE Keys not included Schluessel nicht einbegriffen		
MSL0273225	ER32+ER25	1:1	12000	105Nm	X	MNZ0410005 •	CHSTER32	CHSTER25

• Chiave inclusa
• Key included
• Schluessel inbegriffen

CMZ

MOD:TL25AM/AMS/BM/BMS - TL20M/MS/TM - TA15-20-25-30M/Y/MS/MY/YS - TC15-20-25-30-35M/Y/MS/MY/YS
TD15-20-25-30-35-45-55M/Y/MS/MY/YS

MODULO MOTORIZZATO ASSIALE BISPORGENTE 12000 RPM
Axial opposite face twin driven tool 12000 rpm
Axial angetriebenes Werkzeug halb vorspringend 12000 rpm

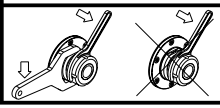

M.T. srl
Via Casino Albini 480
Tel. 0541/956034-957884
Fax 0541/956341
47842 S. GIOVANNI IN M. (RN)
e-mail: mtma@mtmarchetti.com
http://www.mtmarchetti.com

Subject to change without notice.

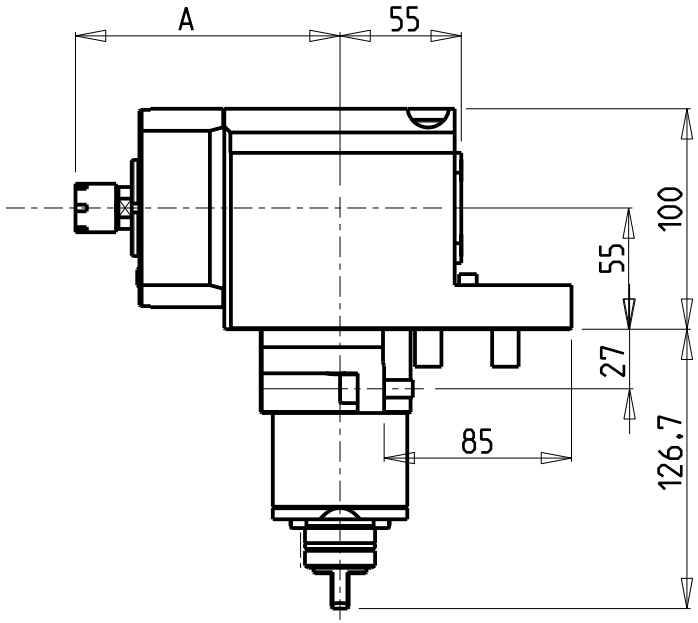

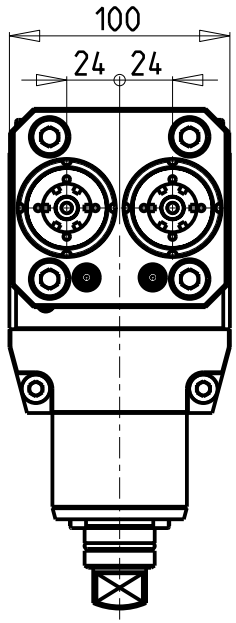

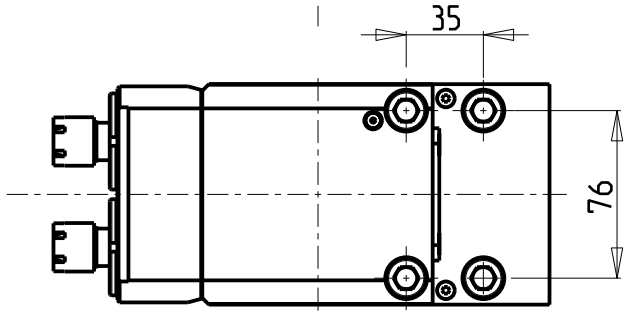

ATTENZIONE - ATTENTION - ACHTUNG

- Per lo smontaggio degli utensili utilizzare sempre la chiave di contrasto come indicato nel manuale d'uso.
- For disassembly of the tools use always the contrast key as mentioned in the user instructions.
- Fuer das Abmontieren der Werkzeuge immer den Gegenschluessel benutzen wie in der Bedienungsanleitung erwaehnt.

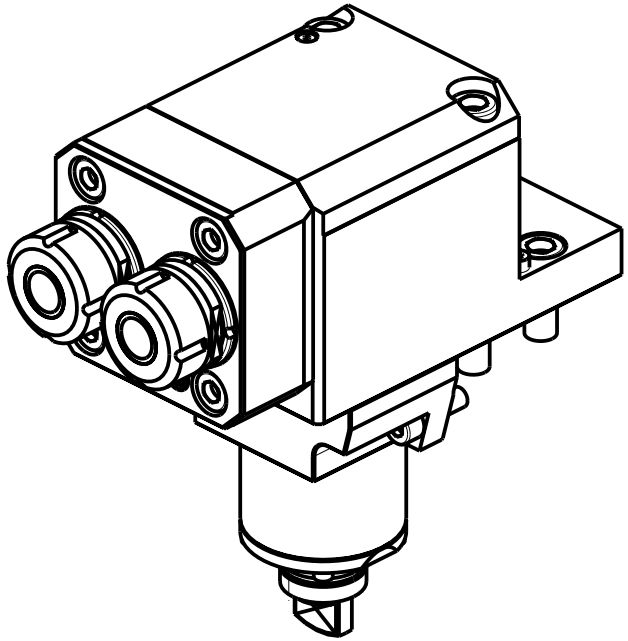

Cod. MT	Mandrino Spindle Spindel	I	RPM	Coppia Max Max Torque Max Drehmoment	Lubrificazione est. Ext. coolant Aussenkuehlung	A	CHIAVI NON INCLUSE Keys not included Schluessel nicht einbegriffen	
MSL0180216	ER16	1:1	6000	30Nm	X	120	CHUB17	CHMNER16
MSL0180225	ER25	1:1	6000	30Nm	X	121	MNL0210007	CHSTER25

CMZ

MOD:TA15-20-25-30M/Y/MS/MY/YS - TC15-20-25-30-35M/Y/MS/MY/YS - TD15-20-25-30-35-45-55M/Y/MS/MY/YS

MODULO MOTORIZZATO ASSIALE 2 USCITE IN Y
Axial single side twin head driven tool in Y
Axial angetriebenes Werkzeug 2 Ausgaenge in Y

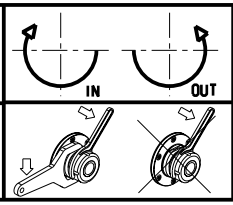

M.T. srl
Via Casino Albini 480
Tel. 0541/956034-957884
Fax 0541/956341
47842 S. GIOVANNI IN M. (RN)
e-mail: mtma@mtmarchetti.com
http://www.mtmarchetti.com

MT®

Subject to change without notice.

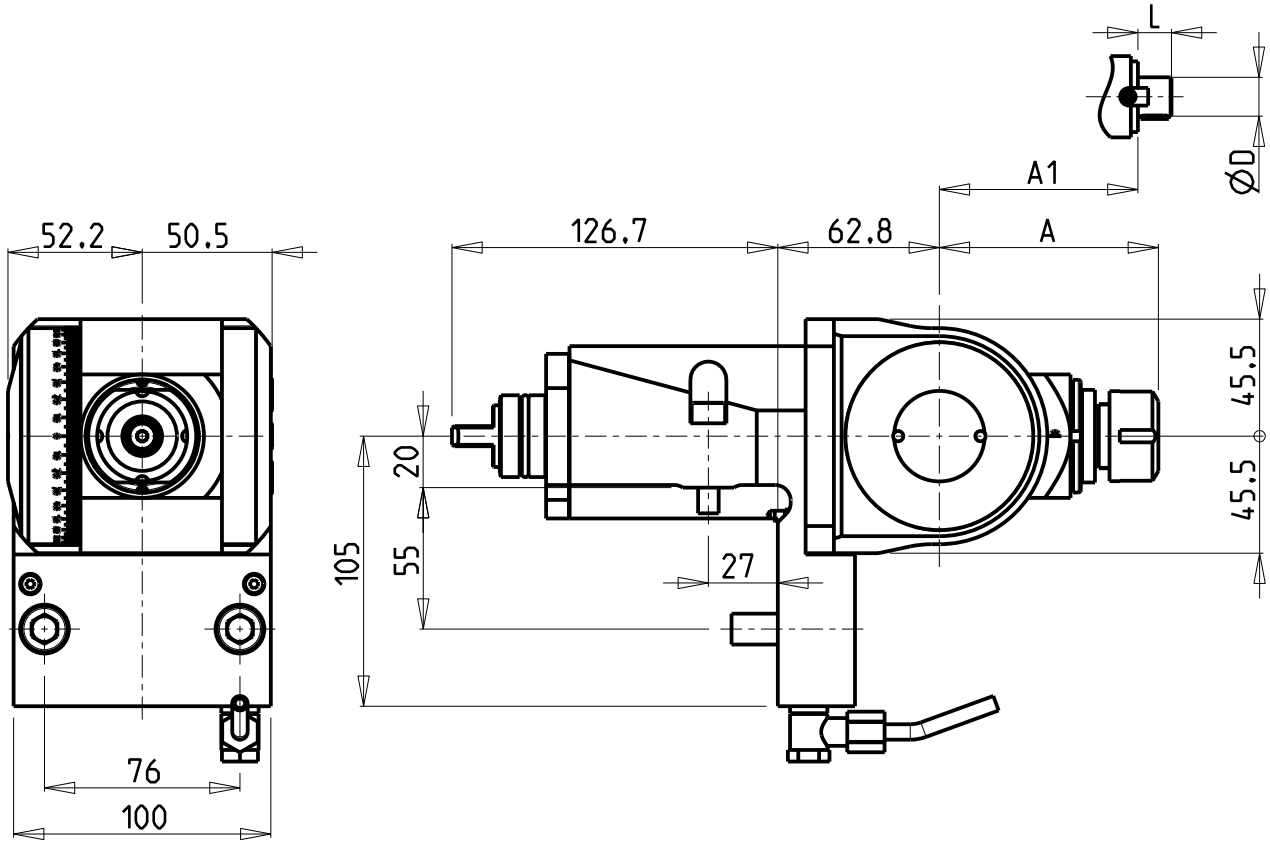

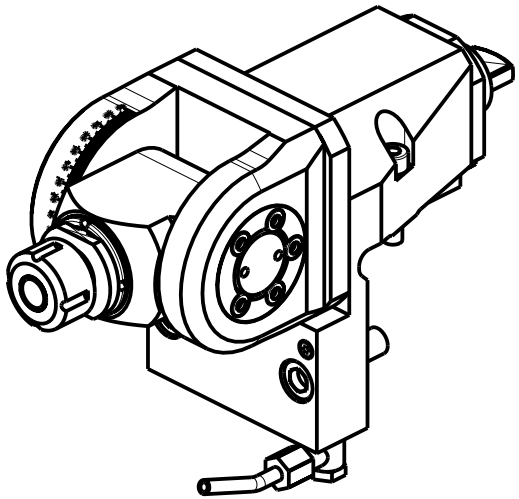

Cod. MT	Mandrino Spindle Spindel	I	RPM	Coppia Max Max Torque Max Drehmoment	Lubrificazione est. Ext. coolant Aussenkuehlung	A	A1	D	L	CHIAVI INCLUSE Keys included Schluessel inbegriffen	
MSL0230120	ER20	1:1	6000	40Nm	X	85.16	-	-	-	CHUB36	CHSTER20
MSL0230125	ER25	1:1	6000	40Nm	X	86.16	-	-	-	CHUB36	CHSTER25
MSL0230516	Ø16x17	1:1	6000	40Nm	X	-	65	16	17	CHUB36	CH_VTCROCE_M08
MSL0230522	Ø22x19	1:1	6000	40Nm	X	-	66	22	19	CHUB36	CH_VTCROCE_M10
MSL0230519	Ø3/4"x3/4"	1:1	6000	40Nm	X	-	65	3/4"	3/4"	CHUB36	CH_VTCROCE_M08

CMZ

MOD:TL25AM/AMS/BM/BMS - TL20M/MS/TM - TA15-20-25-30M/Y/MS/MY/YS - TC15-20-25-30-35M/Y/MS/MY/YS
TD15-20-25-30-35-45-55M/Y/MS/MY/YS

MODULO MOTORIZZATO ORIENTABILE ±90°
±90° adjustable angle driven tool
Angetriebenes Werkzeug schwenkbar ±90°

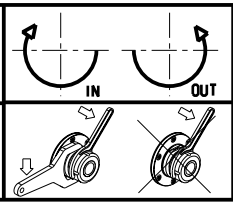

M.T. srl
Via Casino Albini 480
Tel. 0541/956034-957884
Fax 0541/956341
47842 S. GIOVANNI IN M. (RN)
e-mail: mtma@mtmarchetti.com
http://www.mtmarchetti.com

MT®

PAGINA CMZ333-2-00

Subject to change without notice.

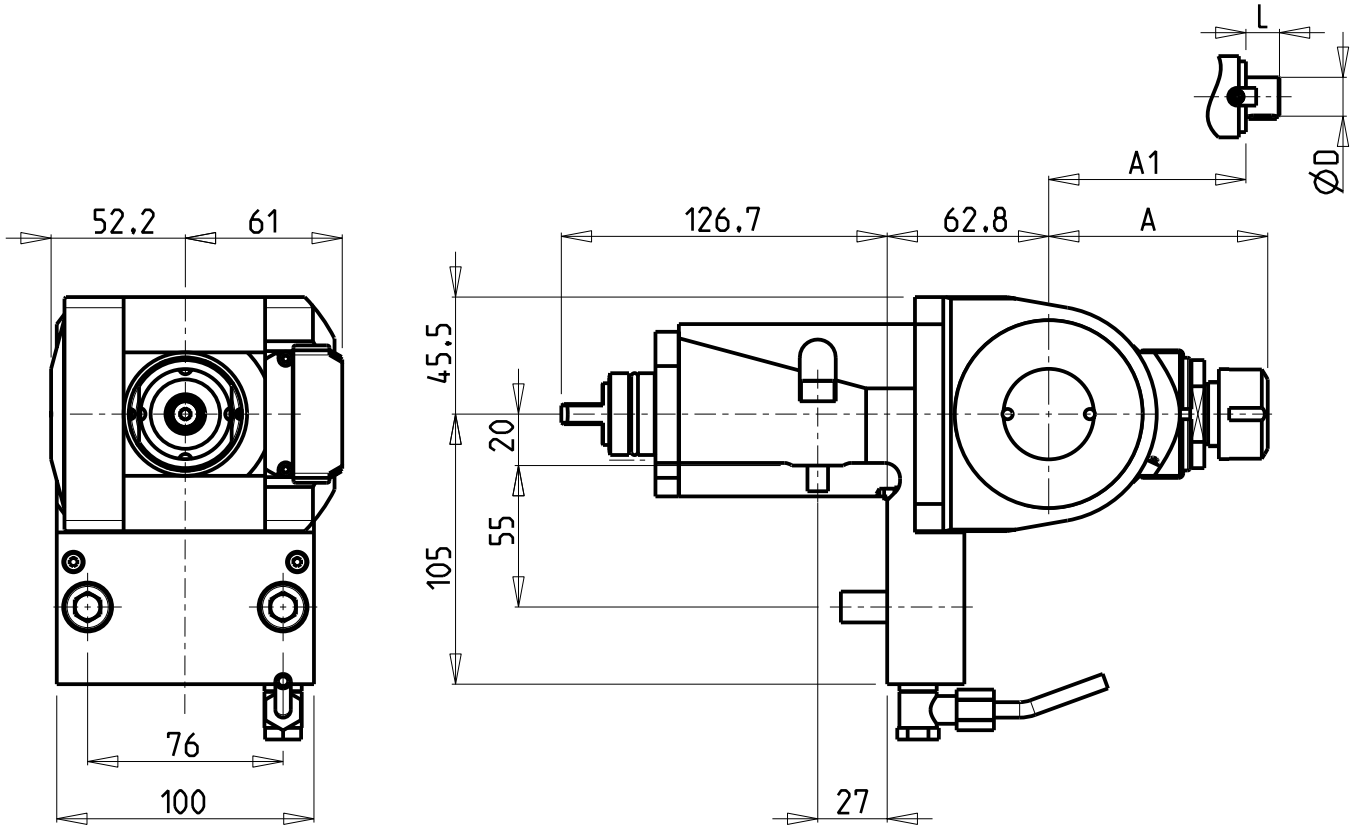

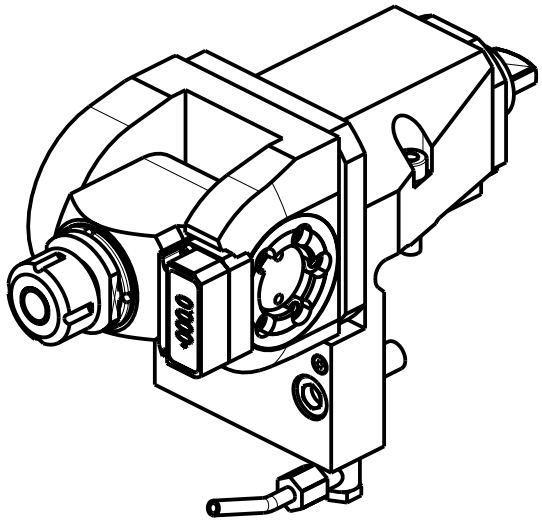

Cod. MT	Mandrino Spindle Spindel	I	RPM	Coppia Max Max Torque Max Drehmoment	Lubrificazione est. Ext. coolant Aussenkuehlung	A	A1	D	L	CHIAVI INCLUSE Keys included Schluessel inbegriffen	
MSL0190120	ER20	1:1	6000	40Nm	X	85.16	–	–	–	CHUB36	CHSTER20
MSL0190125	ER25	1:1	6000	40Nm	X	86.16	–	–	–	CHUB36	CHSTER25
MSL0190516	Ø16x17	1:1	6000	40Nm	X	–	65	16	17	CHUB36	CH_VTCROCE_M08
MSL0190522	Ø22x19	1:1	6000	40Nm	X	–	66	22	19	CHUB36	CH_VTCROCE_M10
MSL0190519	Ø3/4"x3/4"	1:1	6000	40Nm	X	–	65	3/4"	3/4"	CHUB36	CH_VTCROCE_M08

CMZ

MOD:TL25AM/AMS/BM/BMS - TL20M/MS/TM - TA15-20-25-30M/Y/MS/MY/YS - TC15-20-25-30-35M/Y/MS/MY/YS
TD15-20-25-30-35-45-55M/Y/MS/MY/YS

MODULO MOTORIZZATO ORIENTABILE ±90° CON NONIO DIGITALE
±90° adjustable angle driven tool with digital display
Angetriebenes Werkzeug schwenkbar ±90° mit digital display

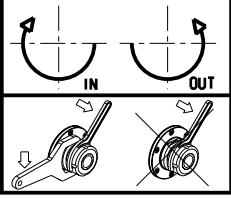

M.T. srl
Via Casino Albini 480
Tel. 0541/956034-957884
Fax 0541/956341
47842 S. GIOVANNI IN M. (RN)
e-mail: mtma@mtmarchetti.com
http://www.mtmarchetti.com

MT®

Subject to change without notice.

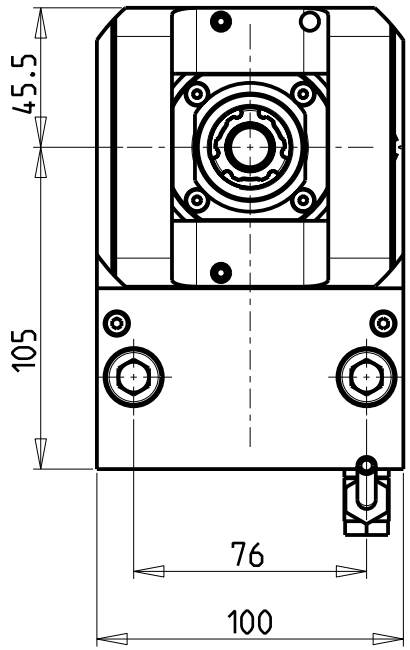

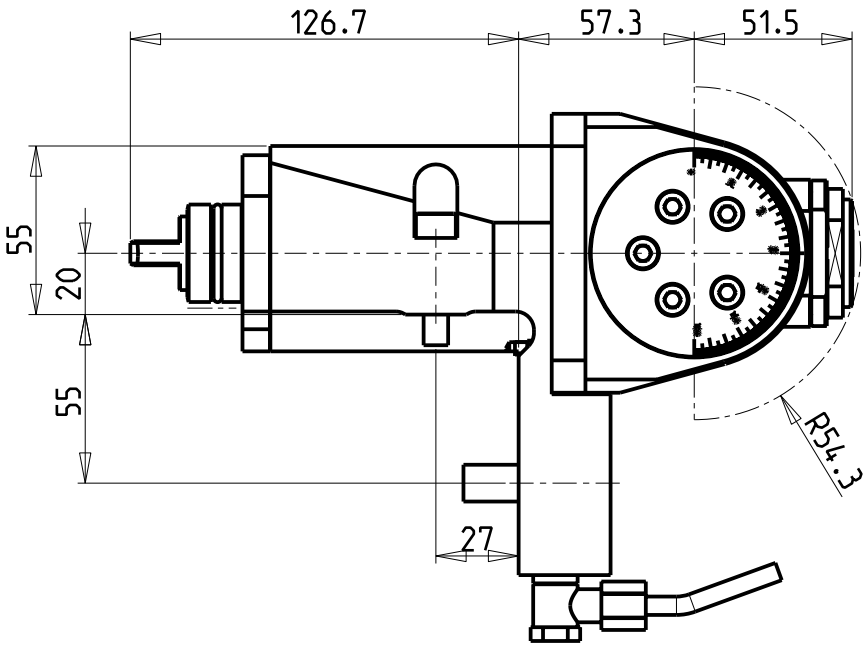

ATTENZIONE - ATTENTION - ACHTUNG

- Per lo smontaggio degli utensili utilizzare sempre la chiave di contrasto come indicato nel manuale d'uso.
- For disassembly of the tools use always the contrast key as mentioned in the user instructions.
- Fuer das Abmontieren der Werkzeuge immer den Gegenschluessel benutzen wie in der Bedienungsanleitung erwaehnt.

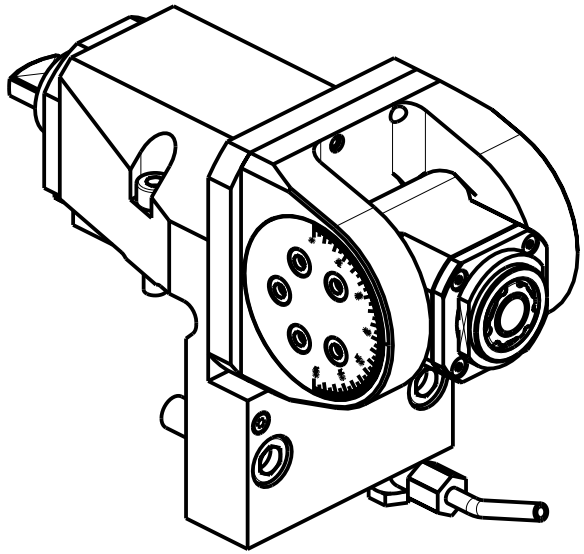

Cod. MT	Mandrino Spindle Spindel	I	RPM	Coppia Max Max Torque Max Drehmoment	Lubrificazione est. Ext. coolant Aussenkuehlung	CHIAVI INCLUSE Keys included Schluessel inbegriffen		
M0220020	ER A 20	1:1	6000	30Nm	X	CHUB36	CHUB22	CHTAER20ZC

CMZ

MOD:TL25AM/AMS/BM/BMS - TL20M/MS/TM - TA15-20-25-30M/Y/MS/MY/YS - TC15-20-25-30-35M/Y/MS/MY/YS
TD15-20-25-30-35-45-55M/Y/MS/MY/YS

MODULO MOTORIZZATO ORIENTABILE ±90°
±90° adjustable angle driven tool
Angetriebenes Werkzeug schwenkbar ±90°

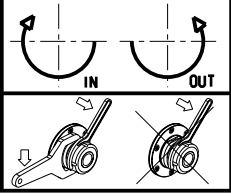

M.T. srl
Via Casino Albini 480
Tel. 0541/956034-957884
Fax 0541/956341
47842 S. GIOVANNI IN M. (RN)
e-mail: mtma@mtmarchetti.com
http://www.mtmarchetti.com

MT®

PAGINA CMZ335-2-00

Subject to change without notice.

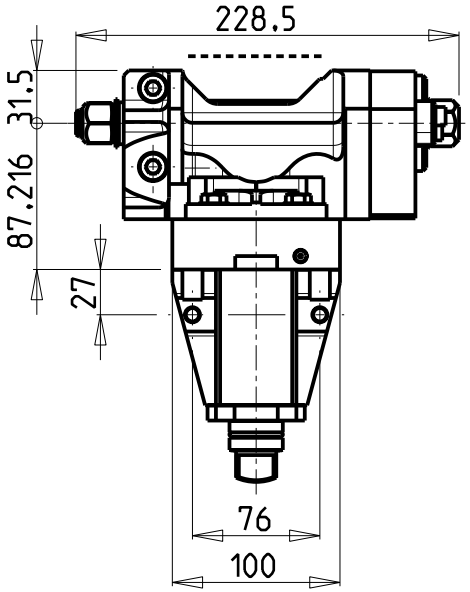

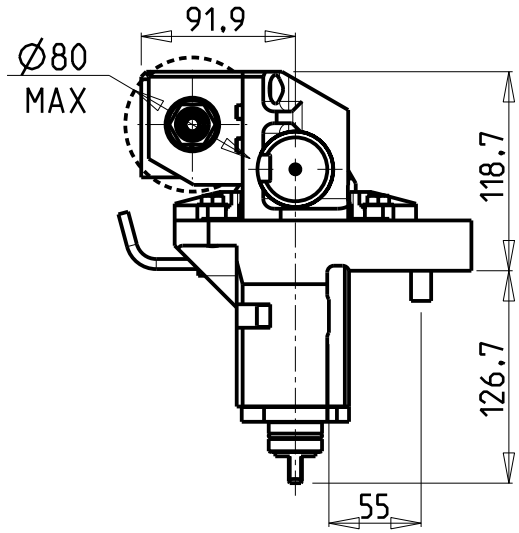

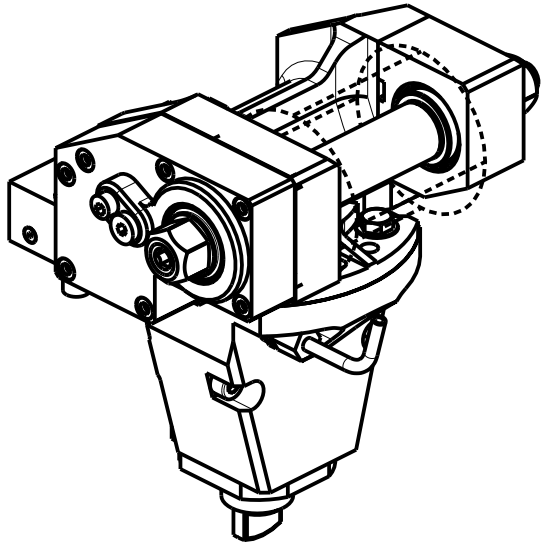

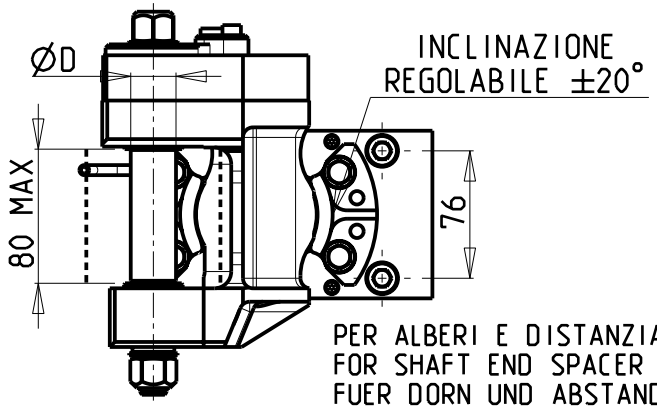

DOTAZIONI - SUPPLIED WITH - AUSSTATTUNG	
mm / inch	- N°1 ALBERO + DISTANZIALI - N°1 SHAFT + SPACER - N°1 DORN + ABSTANDSSTUECK

PER ALBERI E DISTANZIALI VEDI PAG. TBL250-1-00
FOR SHAFT END SPACER SEE PAGE TBL250-1-00
FUER DORN UND ABSTANDSSTUECK SEITE TBL250-1-00

Cod. MT	I	RPM max	Coppia Max Max Torque Max Drehmoment	Lubrificazione est. Ext. coolant Aussenkuehlung	D (mm)	D (Inch)	CHIAVI INCLUSE Keys included Schluessel inbegriffen		
M0081100	1:1	6000	60Nm	X	16-22-27-32	3/4"-1"-1 1/4"	CHUB24	CHUB13	CHESL08
M0082100	2:1	3000	80Nm	X	16-22-27-32	3/4"-1"-1 1/4"	CHUB24	CHUB13	CHESL08

CMZ

MOD:TL25AM/AMS/BM/BMS - TL20M/MS/TM - TA15-20-25-30M/Y/MS/MY/YS - TC15-20-25-30-35M/Y/MS/MY/YS
TD15-20-25-30-35-45-55M/Y/MS/MY/YS

MODULO MOTORIZZATO PORTACREATORE
Driven gear hobber
Angetriebenes Zahnradwaelzfraes-Werkzeug

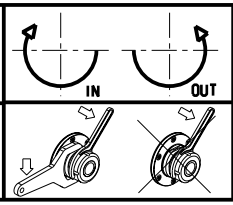

M.T. srl
Via Casino Albini 480
Tel. 0541/956034-957884
Fax 0541/956341
47842 S. GIOVANNI IN M. (RN)
e-mail: mtma@mtmarchetti.com
http://www.mtmarchetti.com

MT

Subject to change without notice.

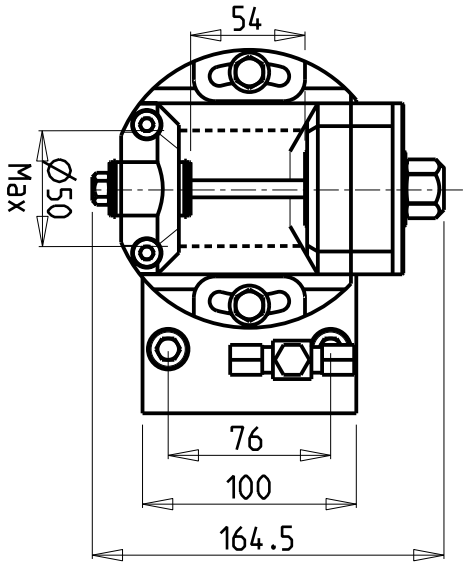

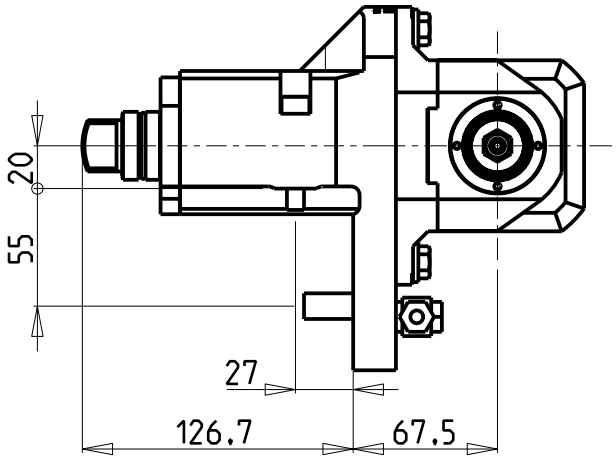

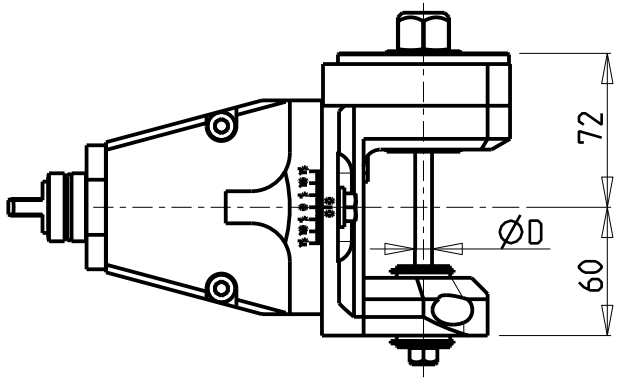

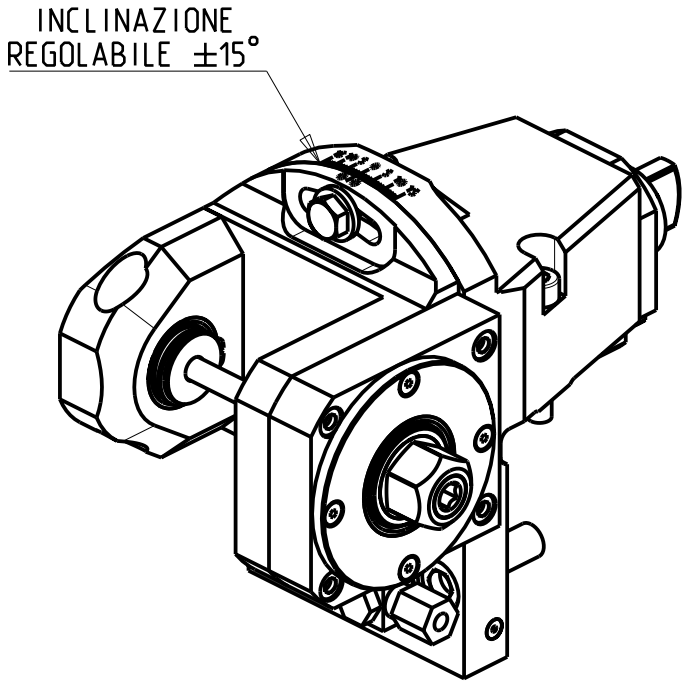

DOTAZIONI - SUPPLIED WITH - AUSSTATTUNG	
mm / inch	- N°1 ALBERO + DISTANZIALI - N°1 SHAFT + SPACER - N°1 DORN + ABSTANDSSTUECK

Cod. MT	I	RPM max	Coppia Max Max Torque Max Drehmoment	Lubrificazione est. Ext. coolant Aussenkuehlung	D (mm)	CHIAVI INCLUSE Keys included Schluessel inbegriffen				
M0311108	1:1	6000	50Nm	X	8	CHUB24	CHUB13	CHESL08	CHESL04	
M0311110	1:1	6000	50Nm	X	10	CHUB24	CHUB17	CHUB13	CHESL05	CHESL08
M0311113	1:1	6000	50Nm	X	13	CHUB24	CHUB19	CHUB13	CHESL06	CHESL08
M0311116	1:1	6000	50Nm	X	16	CHUB24	CHUB13	CHESL08		

CMZ

MOD:TL25AM/AMS/BM/BMS - TL20M/MS/TM - TA15-20-25-30M/Y/MS/MY/YS - TC15-20-25-30-35M/Y/MS/MY/YS
TD15-20-25-30-35-45-55M/Y/MS/MY/YS

MODULO MOTORIZZATO PORTACREATORE RADIALE
Radial driven gear hobber
Radial angetriebenes Zahnradwaelzfraes-Werkzeug

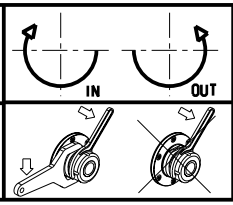

M.T. srl
Via Casino Albini 480
Tel. 0541/956034-957884
Fax 0541/956341
47842 S. GIOVANNI IN M. (RN)
e-mail: mtma@mtmarchetti.com
http://www.mtmarchetti.com

MT®

Subject to change without notice.

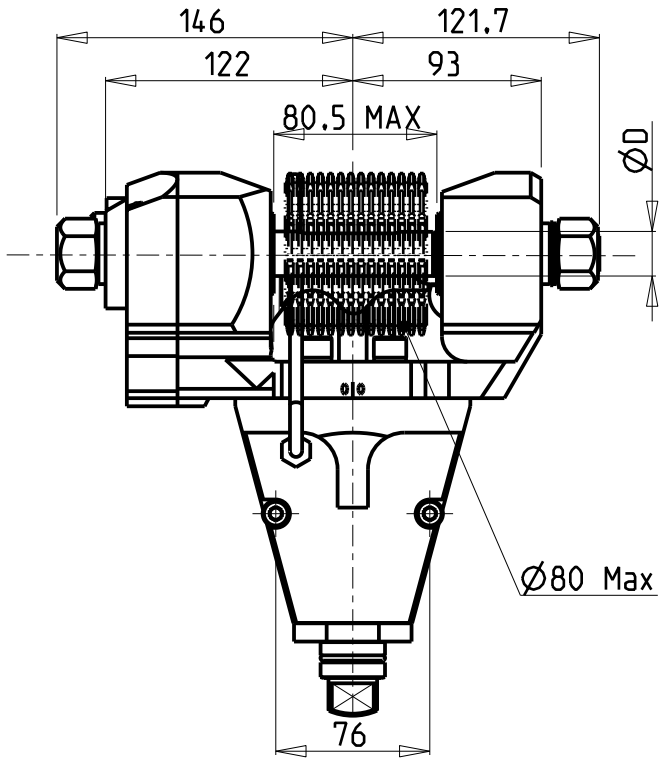

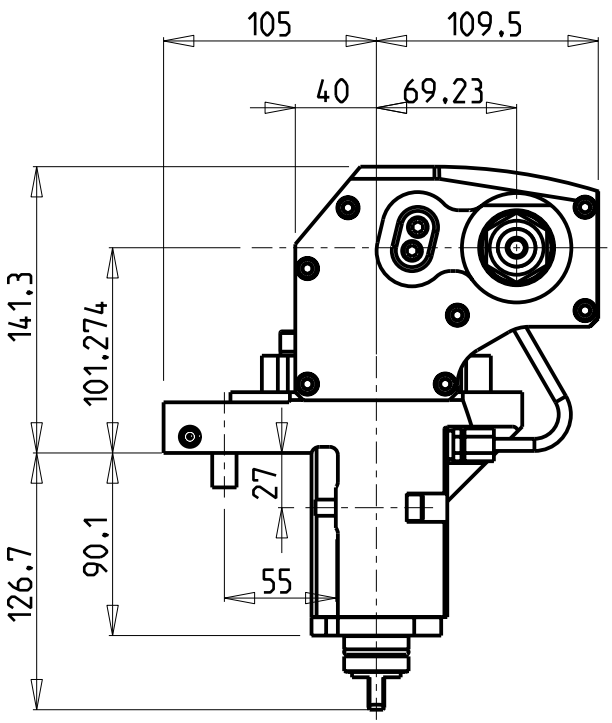

ATTENZIONE - ATTENTION - ACHTUNG

- E' consigliato l'utilizzo su torni dotati di controllo dell'asse Y
- It is recommended to use lathes with the required control of the Y-axis.
- Es ist empfehlenswert Drehbänke, ausgerüstet mit Kontrolle der Y-Achse, zu gebrauchen.

ATTENZIONE - ATTENTION - ACHTUNG

- VERIFICARE LE MISURE DI INGOMBRO PER POSSIBILE INTERFERENZA SU ALCUNI MODELLI DI MACCHINE
- Please check the overall sizes for possible interferences on some machine models
- Bitte überprüfen sie das ausmass um mögliche interferenzen auf einigen maschinen modellen zu vermeiden

DOTAZIONI - SUPPLIED WITH - AUSSTATTUNG

mm / inch	- N°1 ALBERO + DISTANZIALI - N°1 SHAFT + SPACER - N°1 DORN + ABSTANDSSTUECK

PER ALBERI E DISTANZIALI VEDI PAG. TBL250-1-00
FOR SHAFT END SPACER SEE PAGE TBL250-1-00
FUER DORN UND ABSTANDSSTUECK SEITE TBL250-1-00

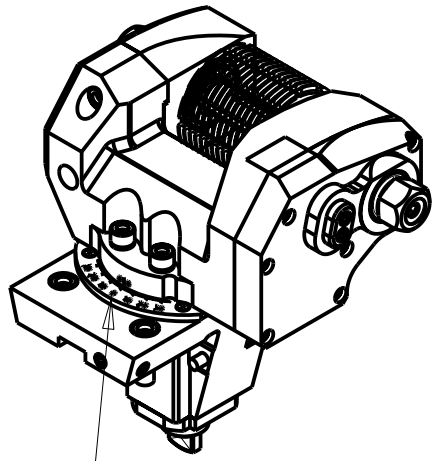

INCLINAZIONE REGOLABILE ±30°

Cod. MT	I	RPM max	Coppia Max Max Torque Max Drehmoment	Lubrificazione est. Ext. coolant Aussenkuehlung	D (mm)	D (Inch)	CHIAVI INCLUSE Keys included Schluessel inbegriffen			
MSL0381100	1:1	6000	90Nm	X	16-22-27-32	3/4"-1"-1 1/4"	CHUB30	CHESL08	CHESL10	CHUB24 (Ø16 / Ø3/4")
MSL0382100	2:1	3000	110Nm	X	16-22-27-32	3/4"-1"-1 1/4"	CHUB30	CHESL08	CHESL10	CHUB24 (Ø16 / Ø3/4")

CMZ

MOD:TL25AM/AMS/BM/BMS - TL20M/MS/TM - TA15-20-25-30M/Y/MS/MY/YS - TC15-20-25-30-35M/Y/MS/MY/YS
TD15-20-25-30-35-45-55M/Y/MS/MY/YS

MODULO MOTORIZZATO PORTACREATORE MAGGIORATO
Reinforced driven gear hobber
Angetriebenes Zahnradwaelzfraes-Werkzeug vergroessert

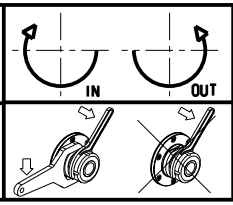

M.T. srl
Via Casino Albini 480
Tel. 0541/956034-957884
Fax 0541/956341
47842 S. GIOVANNI IN M. (RN)
e-mail: mtma@mtmarchetti.com
http://www.mtmarchetti.com

MT®

Subject to change without notice.

ATTENZIONE - ATTENTION - ACHTUNG

- VERIFICARE LE MISURE DI INGOMBRO PER POSSIBILE INTERFERENZA SU ALCUNI MODELLI DI MACCHINE
- Please check the overall sizes for possible interferences on some machine models
- Bitte überprüfen sie das ausmass um mögliche interferenzen auf einigen maschinen modellen zu vermeiden

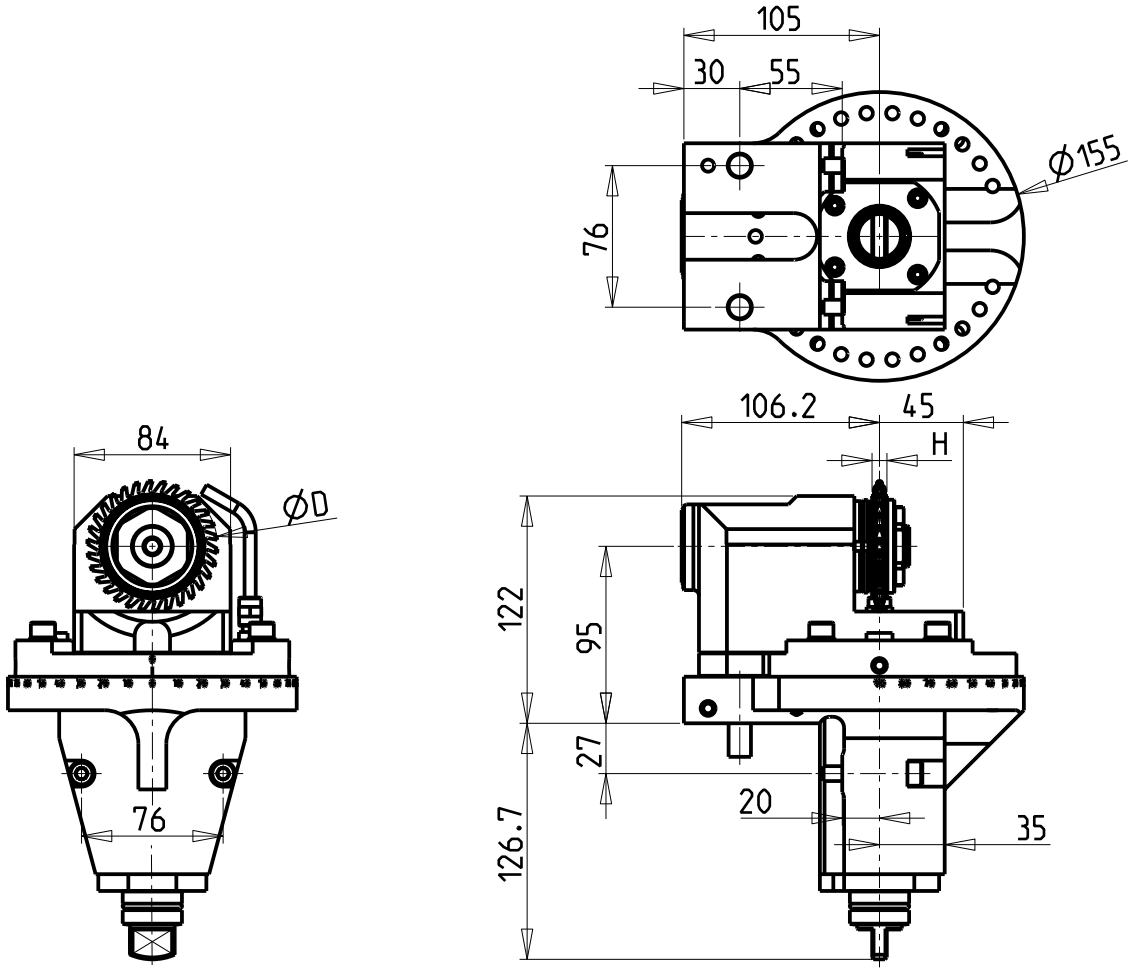

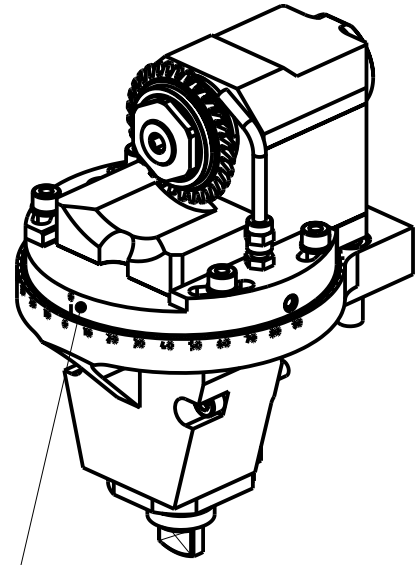

ORIENTABILE DI 360°

Cod. MT	Mandrino Spindle Spindel	I	RPM	Coppia Max Max Torque Max Drehmoment	Lubrificazione est. Ext. coolant Aussenkuehlung	ØD	H	CHIAVI INCLUSE Keys included Schluessel einbegriffen	
MSL0428022	Ø22x12	1:1	6000	50Nm	X	63-70-80	MAX 12	CHUB38	CHESL08

CMZ

MOD:TL25AM/AMS/BM/BMS - TL20M/MS/TM - TA15-20-25-30M/Y/MS/MY/YS - TC15-20-25-30-35M/Y/MS/MY/YS
TD15-20-25-30-35-45-55M/Y/MS/MY/YS

MODULO MOTORIZZATO PER VITI SENZA FINE
Driven tool for worm screws
Angetriebenes werkzeug für schrauben ohne ende

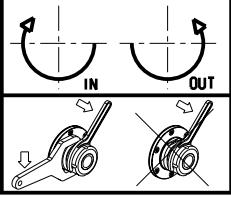

M.T. srl
Via Casino Albini 480
Tel. 0541/956034-957884
Fax 0541/956341
47842 S. GIOVANNI IN M. (RN)
e-mail: mtma@mtmarchetti.com
http://www.mtmarchetti.com

MT®

PAGINA CMZ359-2-00

Subject to change without notice.

04/2022

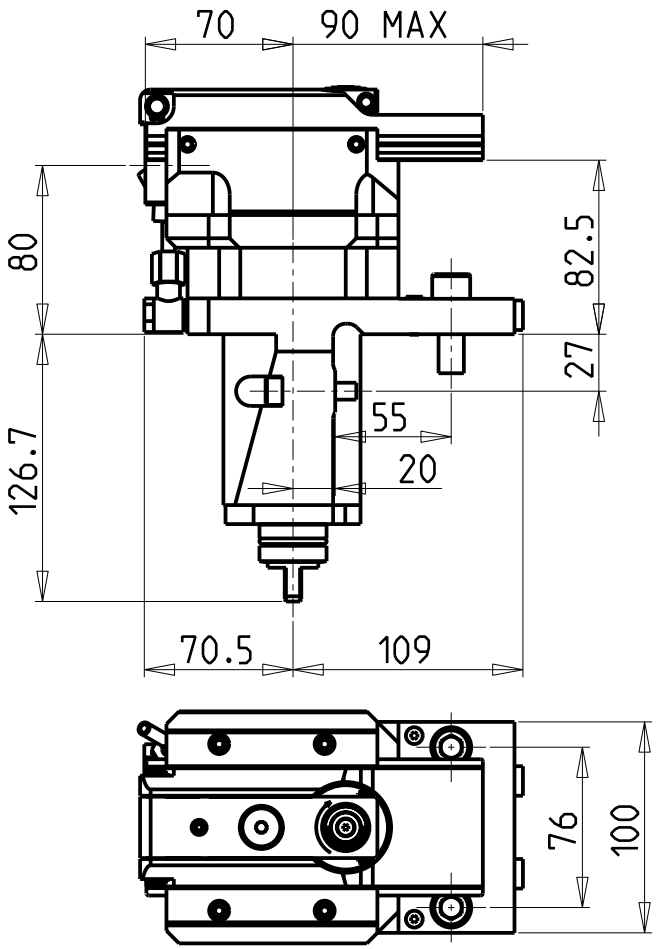

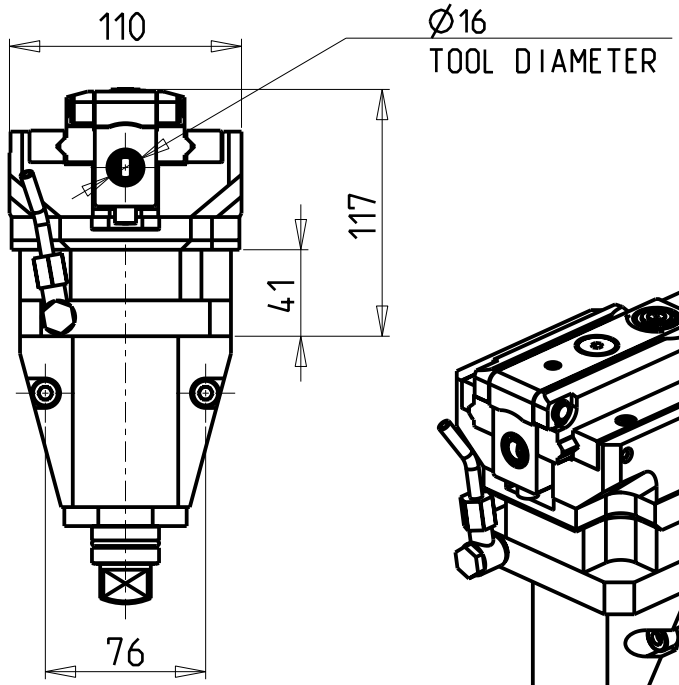

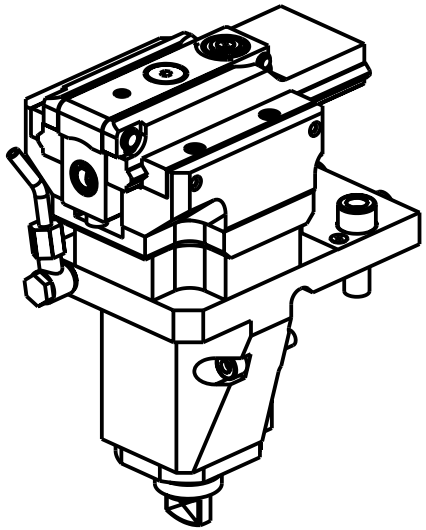

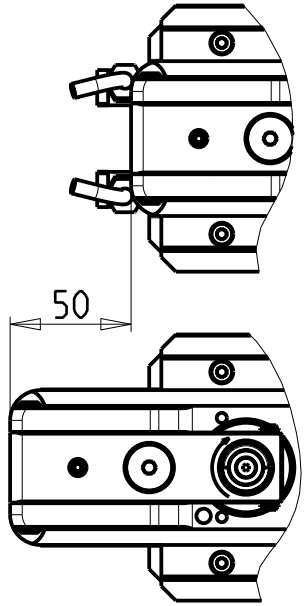

ATTENZIONE - ATTENTION - ACHTUNG

- VERIFICARE LE MISURE DI INGOMBRO PER POSSIBILE INTERFERENZA SU ALCUNI MODELLI DI MACCHINE
- Please check the overall sizes for possible interferences on some machine models
- Bitte überprüfen sie das ausmass um mögliche interferenzen auf einigen maschinen modellen zu vermeiden

DOTAZIONI - SUPPLIED WITH - AUSSTATTUNG

N°1 Boccola di riduz. Ø16-Ø12 e N°1 Boccola di riduz. Ø16-Ø10
N°1 Reduction bush Ø16-Ø12 and N°1 Reduction bush Ø16-Ø10
N°1 Reduzierbuchsen Ø16-Ø12 und N°1 Reduzierbuchsen Ø16-Ø10

Cod. MT	I	RPM MAX	Lubr. esterna Ext. coolant Aussenkuehlung
MSL0460100	4:1	2000	X

PER UTENSILI STOZZATORI VEDI PAG. TBL400-1-00
FOR DRIVEN SLOTTING TOOL CUTTING-TOOLS SEE PAGE TBL400-1-00
FÜR NUTENSTOSS-WERKZEUG SCHNEIDEWERKZEUGE SIEHE SEITE TBL400-1-00

CMZ

MOD:TL25AM/AMS/BM/BMS - TL20M/MS/TM - TA15-20-25-30M/Y/MS/MY/YS - TC15-20-25-30-35M/Y/MS/MY/YS
TD15-20-25-30-35-45-55M/Y/MS/MY/YS

MODULO MOTORIZZATO STOZZATORE CORSA 50mm H=80mm
Slotting driven tool 50mm stroke H=80mm
Keilnutenstossmaschine 50mm Hub H=80mm

M.T. srl
Via Casino Albini 480
Tel. 0541/956034-957884
Fax 0541/956341
47842 S. GIOVANNI IN M. (RN)
e-mail: mtma@mtmarchetti.com
http://www.mtmarchetti.com

Subject to change without notice.

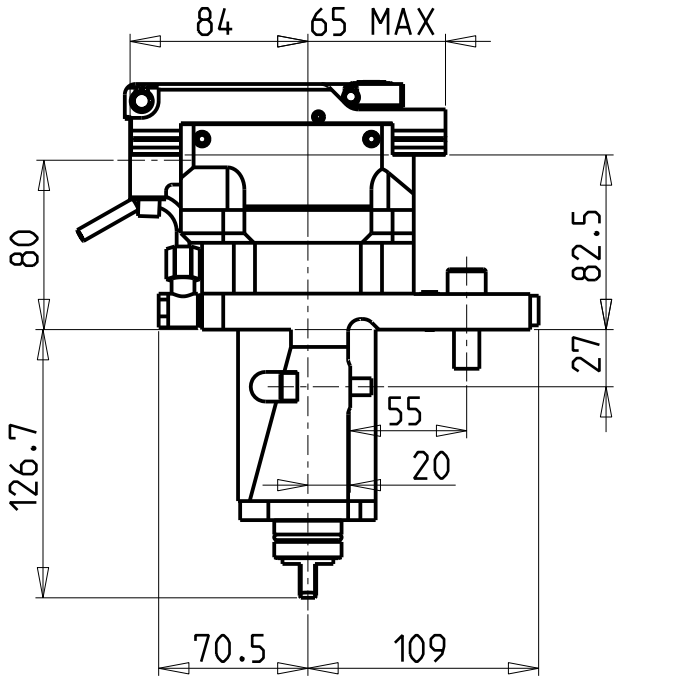

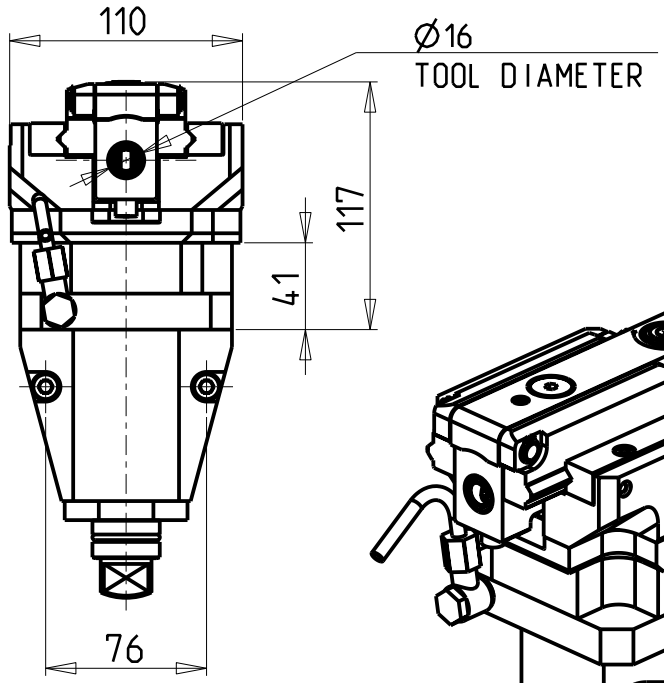

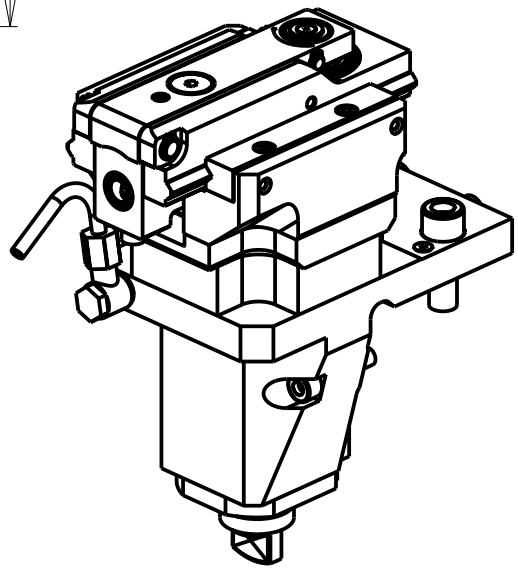

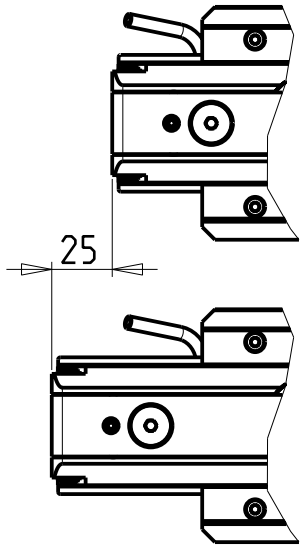

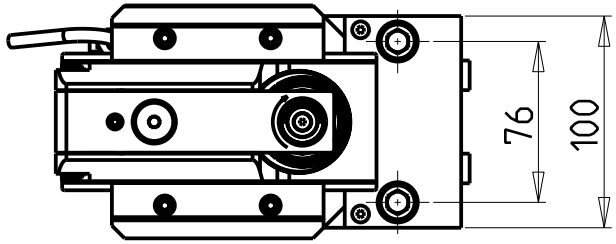

ATTENZIONE - ATTENTION - ACHTUNG

- VERIFICARE LE MISURE DI INGOMBRO PER POSSIBILE INTERFERENZA SU ALCUNI MODELLI DI MACCHINE
- Please check the overall sizes for possible interferences on some machine models
- Bitte überprüfen sie das ausmass um mögliche interferenzen auf einigen maschinen modellen zu vermeiden

DOTAZIONI - SUPPLIED WITH - AUSSTATTUNG

N°1 Boccola di riduz. Ø16-Ø12 e N°1 Boccola di riduz. Ø16-Ø10
N°1 Reduction bush Ø16-Ø12 and N°1 Reduction bush Ø16-Ø10
N°1 Reduzierbuchsen Ø16-Ø12 und N°1 Reduzierbuchsen Ø16-Ø10

Cod. MT	I	RPM MAX	Lubr. esterna Ext. coolant Aussenkuehlung
MSL0460200	4:1	2400	X

PER UTENSILI STOZZATORI VEDI PAG. TBL400-1-00
FOR DRIVEN SLOTTING TOOL CUTTING-TOOLS SEE PAGE TBL400-1-00
FÜR NUTENSTOSS-WERKZEUG SCHNEIDEWERKZEUGE SIEHE SEITE TBL400-1-00

CMZ

MOD:TL25AM/AMS/BM/BMS - TL20M/MS/TM - TA15-20-25-30M/Y/MS/MY/YS - TC15-20-25-30-35M/Y/MS/MY/YS
TD15-20-25-30-35-45-55M/Y/MS/MY/YS

MODULO MOTORIZZATO STOZZATORE CORSA 25mm H=80mm
Slotting driven tool 25mm stroke H=80mm
Keilnutenstossmaschine 25mm Hub H=80mm

M.T. srl
Via Casino Albini 480
Tel. 0541/956034-957884
Fax 0541/956341
47842 S. GIOVANNI IN M. (RN)
e-mail: mtma@mtmarchetti.com
http://www.mtmarchetti.com

Subject to change without notice.

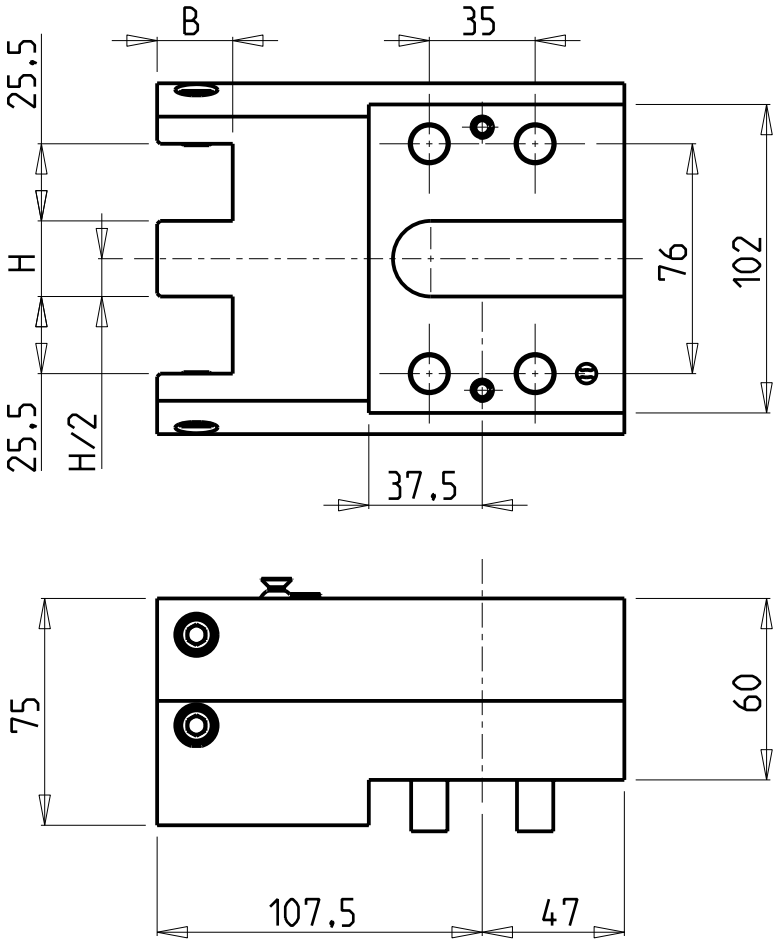

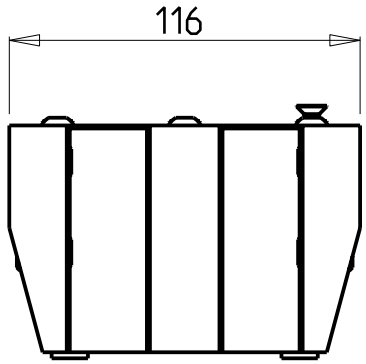

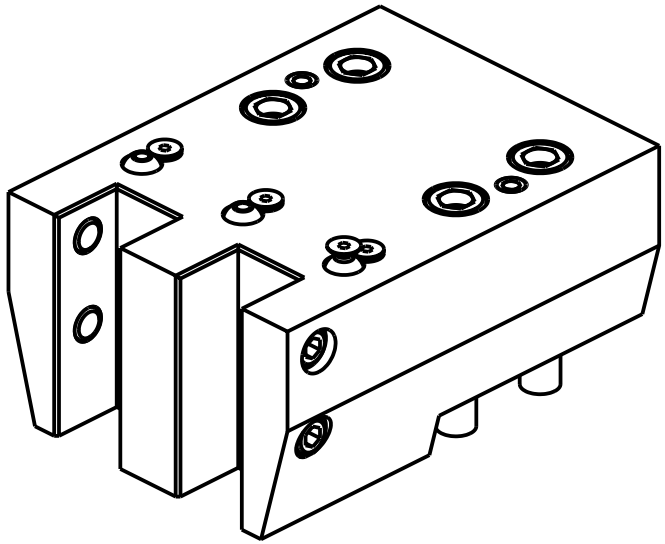

Cod. MT	Misure Dimensions Masse	H	B
MSL0342500	mm	25	25

CMZ

MOD:TA15-20-25-30M/Y/MS/MY/YS - TC15-20-25-30-35M/Y/MS/MY/YS - TD15-20-25-30-35-45-55M/Y/MS/MY/YS

PORTAUTENSILE RADIALE SOVRAPPOSTO QD=25mm
Radial single side twin static tool QD=25mm
Radial Werkzeughalter ueberlagert QD=25mm

M.T. srl
Via Casino Albini 480
Tel. 0541/956034-957884
Fax 0541/956341
47842 S. GIOVANNI IN M. (RN)
e-mail: mtma@mtmarchetti.com
http://www.mtmarchetti.com

Subject to change without notice.

04/2022

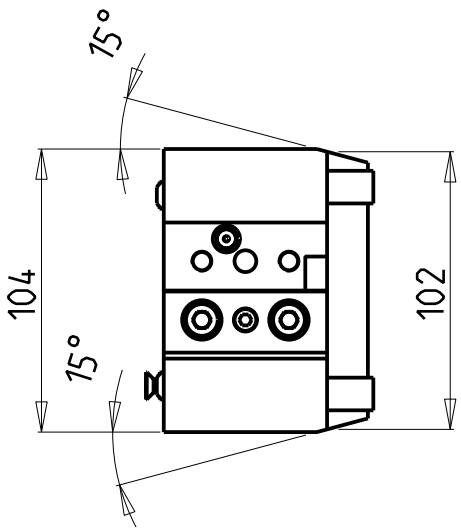

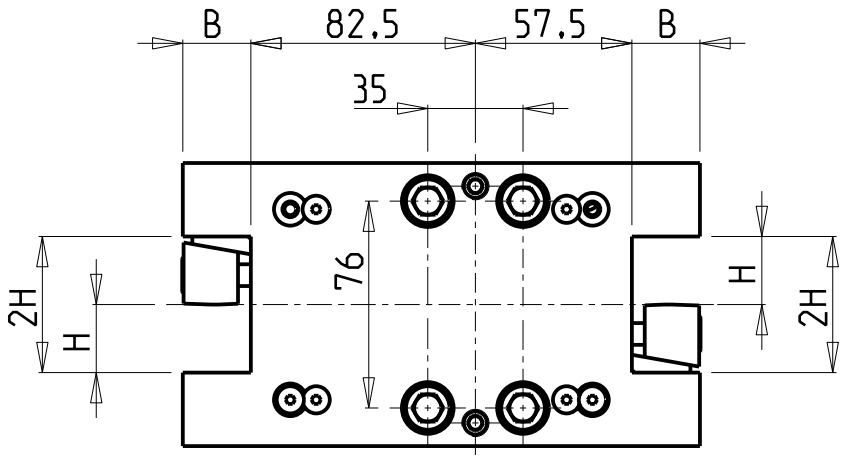

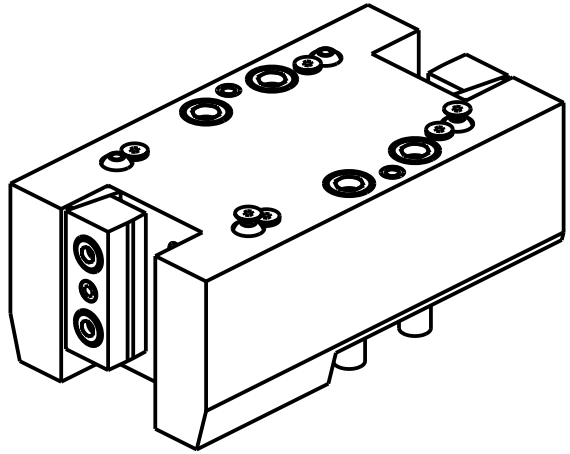

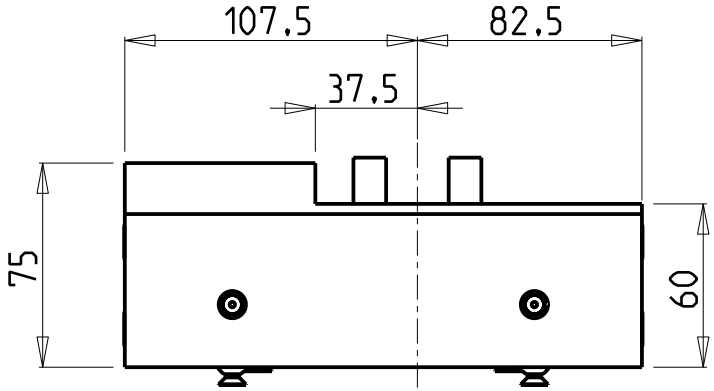

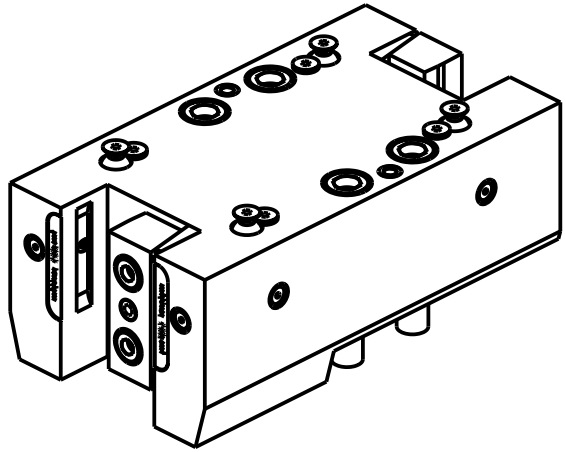

MSL0392510

Cod. MT	N°Utensili N°Tools N°Werkzeuge	Lubrificazione int. Coolant through Innenkuehlung	Lubrificazione est. Ext. coolant Aussenkuehlung	Misure Dimensions Masse	B	H	
MSL0392500	2	-	X	mm	25	25	
MSL0392510	2	P=70bar	X	mm	25	25	NEW
MSL0392540	2	-	X	Inch	1"	1"	

CMZ

MOD:TL25AM/AMS/BM/BMS - TL20M/MS/TM - TA15-20-25-30M/Y/MS/MY/YS - TC15-20-25-30-35M/Y/MS/MY/YS
TD15-20-25-30-35-45-55M/Y/MS/MY/YS

PORTAUTENSILE RADIALE DOPPIO QD=25mm / QD=1"
Radial double static tool QD=25mm / QD=1"
Radial Doppel-Werkzeughalter QD=25mm / QD=1"

M.T. srl
Via Casino Albini 480
Tel. 0541/956034-957884
Fax 0541/956341
47842 S. GIOVANNI IN M. (RN)
e-mail: mtma@mtmarchetti.com
http://www.mtmarchetti.com

Subject to change without notice.

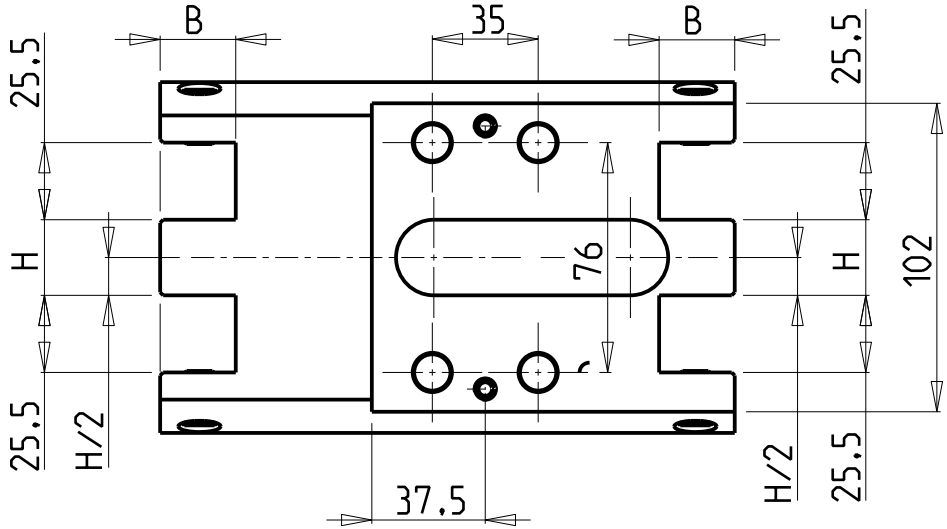

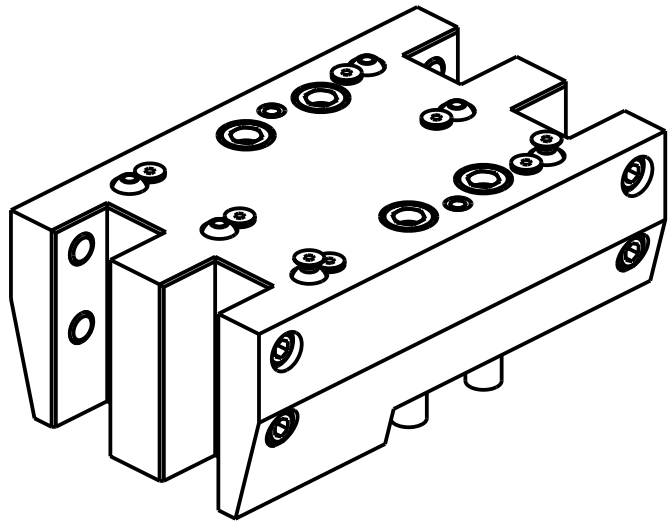

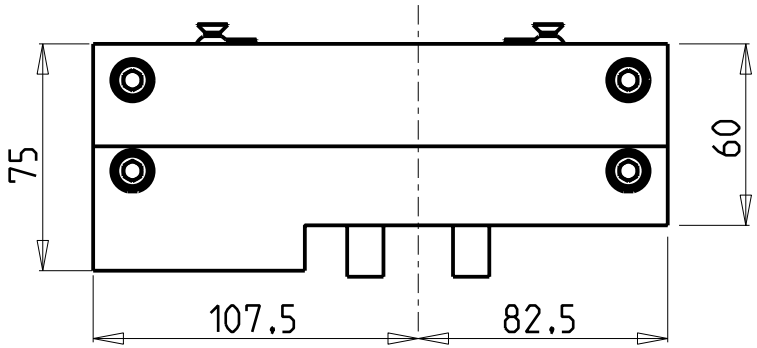

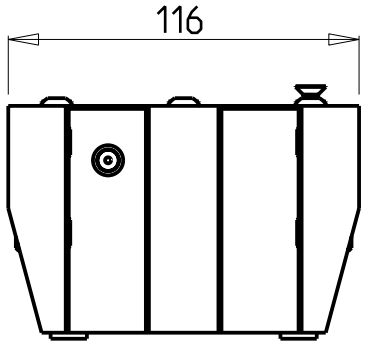

Cod. MT	Misure Dimensions Masse	H	B
MSL0332500	mm	25	25

CMZ

MOD:TA15-20-25-30YS - TC15-20-25-30-35YS - TD15-20-25-30-35-45-55YS

PORTAUTENSILE RADIALE DOPPIO SOVRAPPOSTO QD=25mm
Radial double side twin static tool QD=25mm
Radial Doppel-Werkzeughalter ueberlagert QD=25mm

M.T. srl
Via Casino Albini 480
Tel. 0541/956034-957884
Fax 0541/956341
47842 S. GIOVANNI IN M. (RN)
e-mail: mtma@mtmarchetti.com
http://www.mtmarchetti.com

Subject to change without notice.

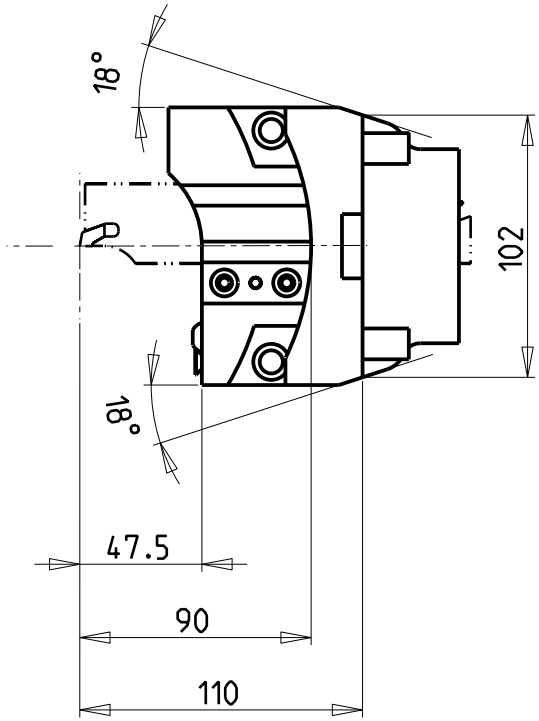

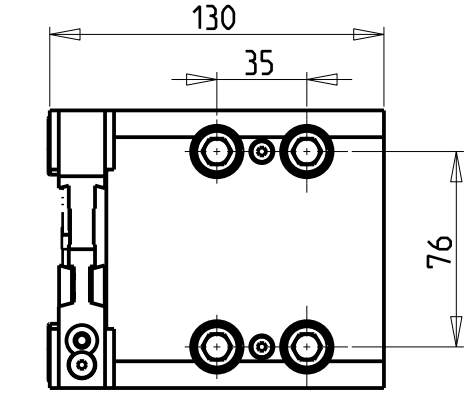

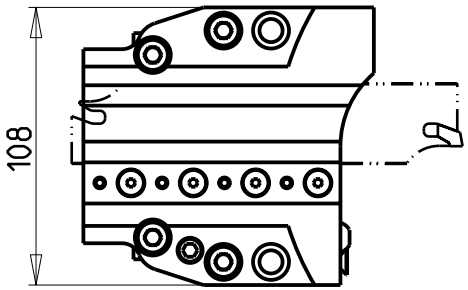

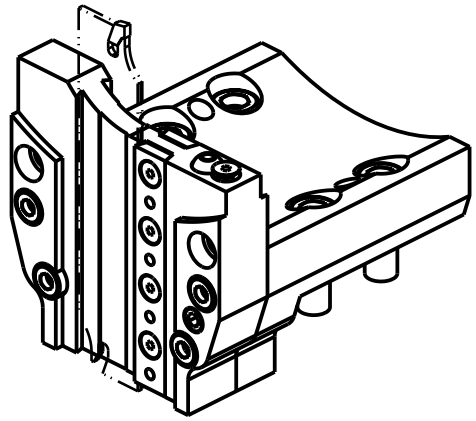

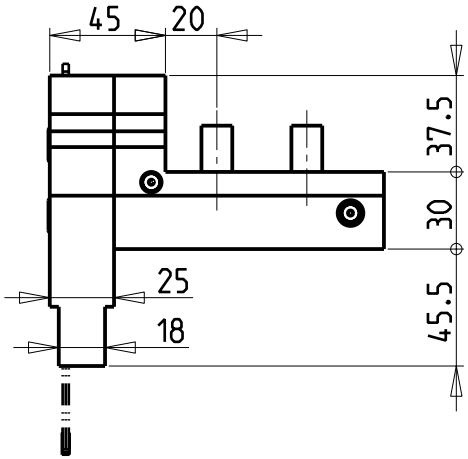

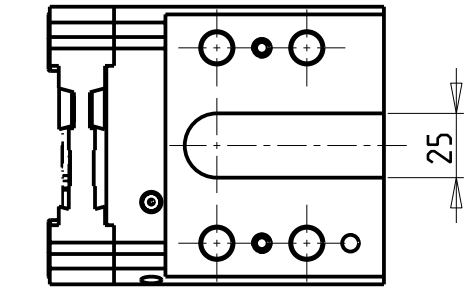

POSSIBILITA' DI LAVORO M3/M4
OPTION OF M3/M4 WORKING
ARBEITSMOGLICHKEIT M3/M4

Cod. MT	N°Utensili N°Tools N°Werkzeuge	Lubr.esterna Ext. coolant Aussenkuehlung
MSL0530132	1	X

DOTAZIONI - SUPPLIED WITH - AUSSTATTUNG

N°1 - LAMA - BLADE - KLINGE ISCAR H=32 Sp. 3/4mm
(KENNAMETAL OPTIONAL)

N°10 - INSERTI - INSERTS - EINLAGEN

N°1 - CHIAVE A T PER MONTAGGIO INSERTI
- T-WRENCH FOR INSERT SET UP
- T-SCHLUESSEL FUER EINSATZSTUECK-MONTAGE

CMZ

MOD:TL25AM/AMS/BM/BMS - TL20M/MS/TM - TA15-20-25-30M/Y/MS/MY/YS - TC15-20-25-30-35M/Y/MS/MY/YS
TD15-20-25-30-35-45-55M/Y/MS/MY/YS

PORTAUTENSILE PER LAMA DOPPIO
Radial double blade holder
Radial Doppel-Abstechhalter

M.T. srl
Via Casino Albini 480
Tel. 0541/956034-957884
Fax 0541/956341
47842 S. GIOVANNI IN M. (RN)
e-mail: mtma@mtmarchetti.com
http://www.mtmarchetti.com

Subject to change without notice.

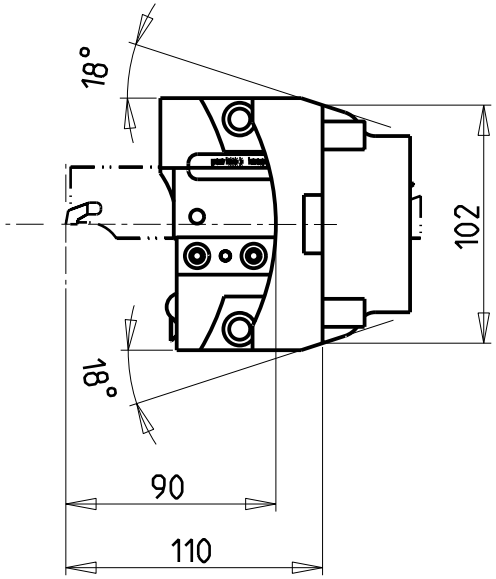

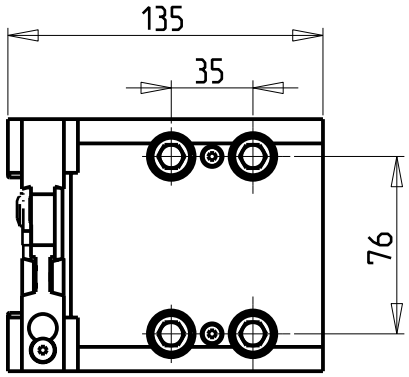

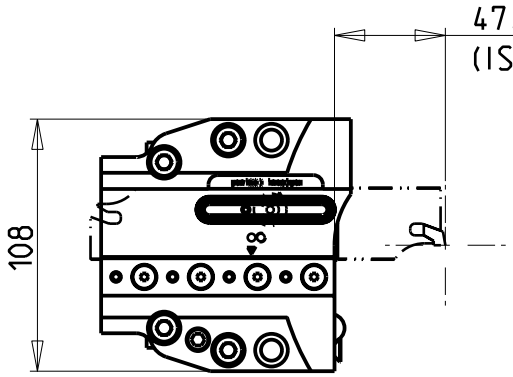

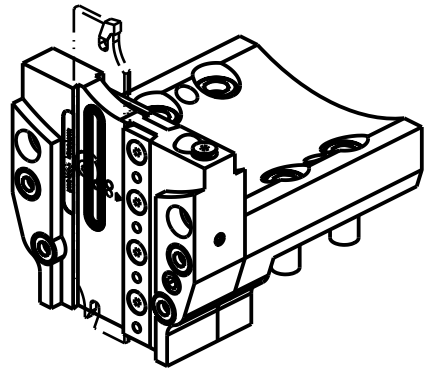

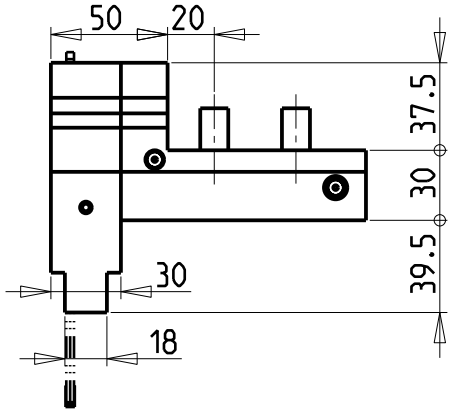

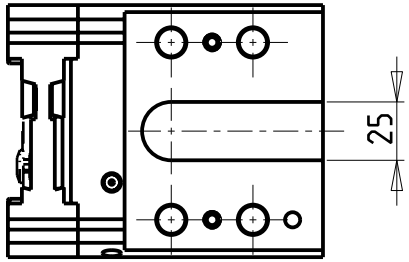

POSSIBILITA' DI LAVORO M3/M4
OPTION OF M3/M4 WORKING
ARBEITSMÖGLICHKEIT M3/M4

KIT LAME NON INCLUSI (OPZIONALI)
BLADES NOT SUPPLIED WITH (OPTIONAL)
KLINGEN NICHT INBEGRIFFEN (OPTIONAL)

- LAMA-BLADE-KLINGE SANDVIK H=32 sp.3 cod. QD_NN2G60C25A
  +INSERTI-INSERTS-EINLAGEN cod. QD_NG_0300_0002_CM_1145 (10 pz.)
- LAMA-BLADE-KLINGE SANDVIK H=32 sp.4 cod. QD_NN2H60C25A
  +INSERTI-INSERTS-EINLAGEN cod. QD_NH_0400_0002_CM_1145 (10 pz.)
- LAMA-BLADE-KLINGE ISCAR H=32 sp.3 cod. SGFH_32K_3
  +INSERTI-INSERTS-EINLAGEN cod. 6011365 (10pz.)
- LAMA-BLADE-KLINGE ISCAR H=32 sp.4 cod. SGFH_32K_4
  +INSERTI-INSERTS-EINLAGEN cod. 6011366 (10pz.)
- LAMA-BLADE-KLINGE WALTER H=32 sp.3 cod. G2042.32N-3T45SX-P
  +INSERTI-INSERTS-EINLAGEN cod. SX-3E300N02-CE4 WSM33S (10pz.) + CHIAVE-KEY cod. FS1494
- LAMA-BLADE-KLINGE WALTER H=32 sp.4 cod. G2042.32N-4T50SX-P
  +INSERTI-INSERTS-EINLAGEN cod. SX-4E400N02-CE4 WSM33S (10pz.) + CHIAVE-KEY cod. FS1494

Cod. MT	N°Utensili N°Tools N°Werkzeuge	Lubr.esterna Ext. coolant Aussenkuehlung	Lubr.interna Coolant through Innenkuehlung
MSL0540132	1	X	P=70bar

CMZ

MOD:TL25AM/AMS/BM/BMS - TL20M/MS/TM - TA15-20-25-30M/Y/MS/MY/YS - TC15-20-25-30-35M/Y/MS/MY/YS
TD15-20-25-30-35-45-55M/Y/MS/MY/YS

PORTAUTENSILE PER LAMA DOPPIO CON LUBRIFICAZIONE INTERNA
Radial double blade holder with internal coolant
Radial Doppel-Abstechhalter mit Innenkuehlung

M.T. srl
Via Casino Albini 480
Tel. 0541/956034-957884
Fax 0541/956341
47842 S. GIOVANNI IN M. (RN)
e-mail: mtma@mtmarchetti.com
http://www.mtmarchetti.com

Subject to change without notice.

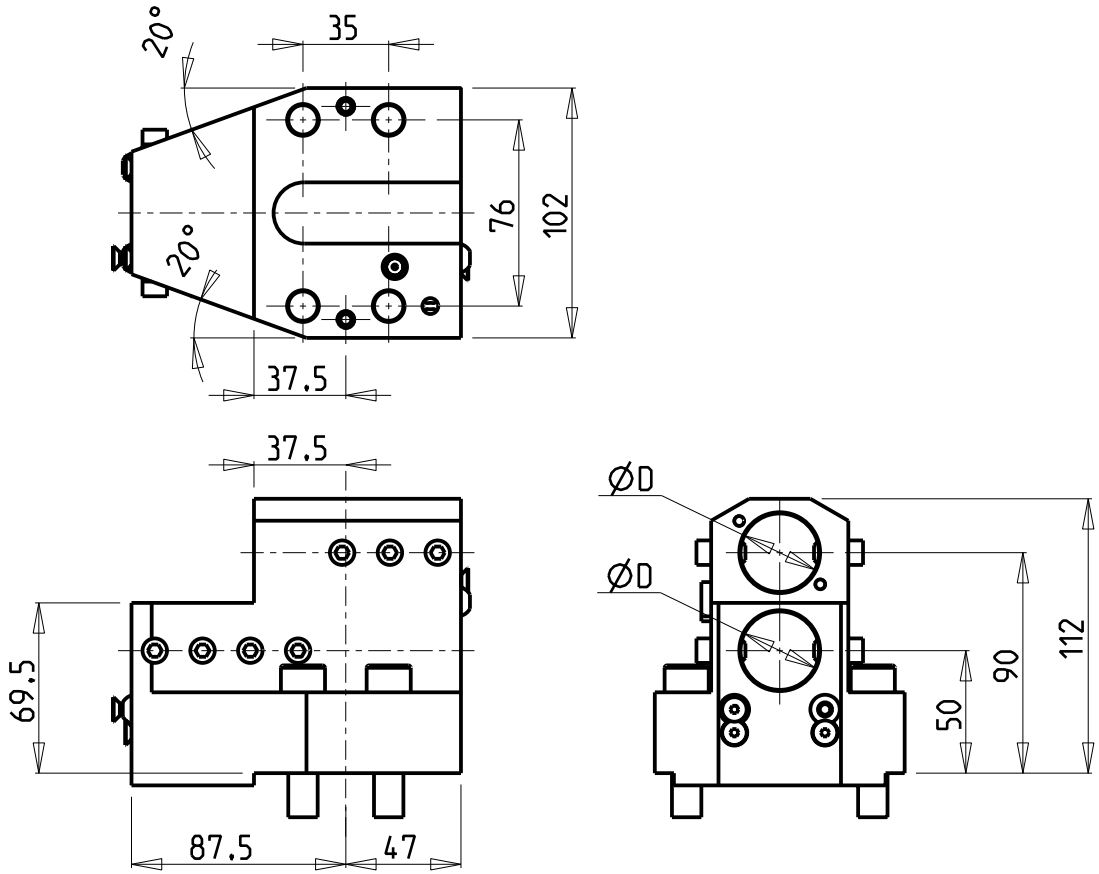

KIT ADDUZIONE INTERNA (OPZIONALE)
KIT FOR INTERNAL COOLANT (OPTIONAL)
KIT FUER INTERNE KUEHLMITTELZUFUHR (OPTIONAL)
Ø32mm - Ø1-1/4" cod. KIT1000001

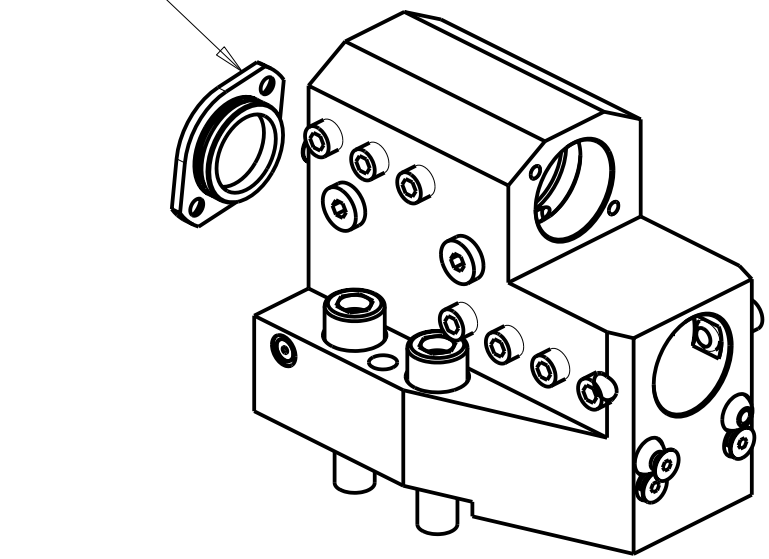

Cod. MT	N°Utensili N°Tools N°Werkzeuge	Lubrificazione int. opzionale Coolant through optional Innenkuehlung Optional	Lubrificazione est. Ext. coolant Aussenkuehlung	Misure Dimensions Masse	D
MSL0353200	2	X	X	mm	32
MSL0353175	2	X	X	Inch	1 1/4"

PER BOCCOLE DI RIDUZIONE VEDI PAG. TBL150-1-00
FOR REDUCING BUSHINGS SEE PAGE TBL150-1-00
FUR REDUZIERBUCHSE SIEHE SEITE TBL150-1-00

CMZ

MOD: TA15-20-25-30M/Y/MS/MY/YS - TC15-20-25-30-35M/Y/MS/MY/YS - TD15-20-25-30-35-45-55M/Y/MS/MY/YS

PORTAUTENSILE ASSIALE PER BARENO 2 POSIZIONI Ø32mm / Ø1 1/4"
Axial double boring bar holder Ø32mm / Ø1 1/4"
Axial Bohrhalter 2 Positionen Ø32mm / Ø1 1/4"

M.T. srl
Via Casino Albini 480
Tel. 0541/956034-957884
Fax 0541/956341
47842 S. GIOVANNI IN M. (RN)
e-mail: mtma@mtmarchetti.com
http://www.mtmarchetti.com

Subject to change without notice.

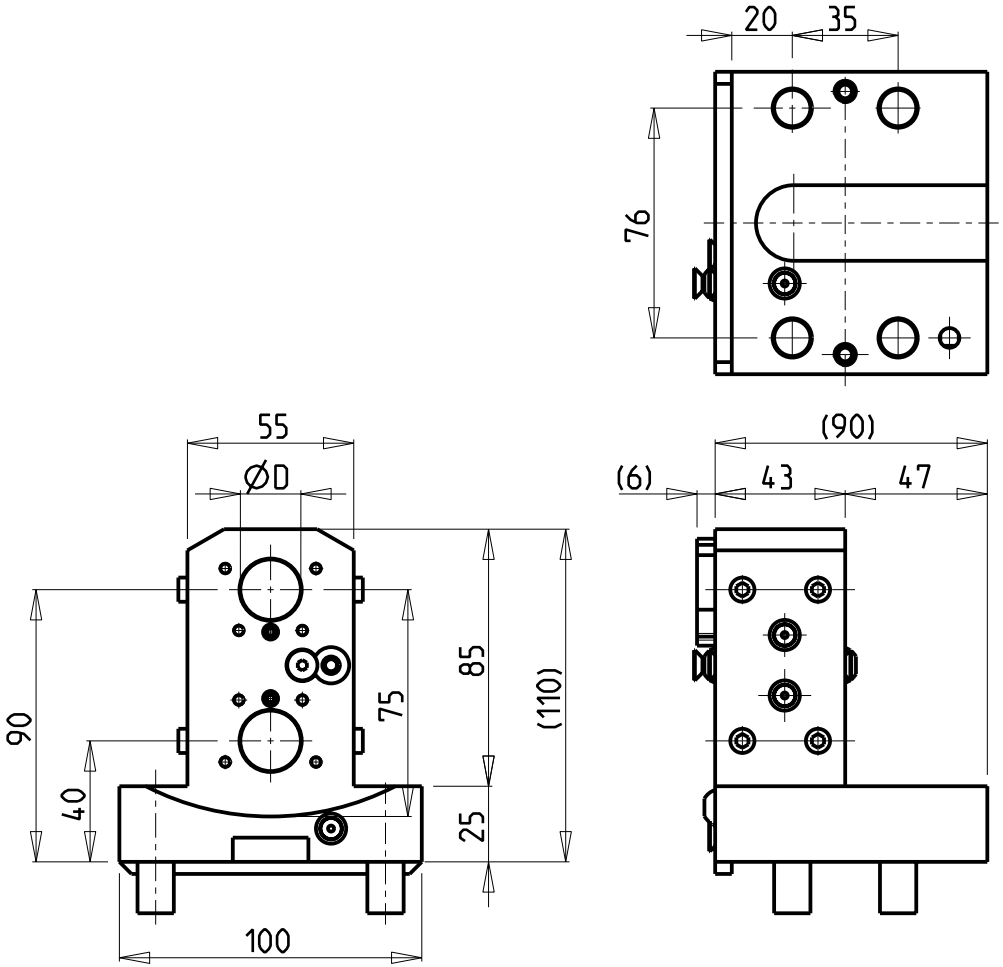

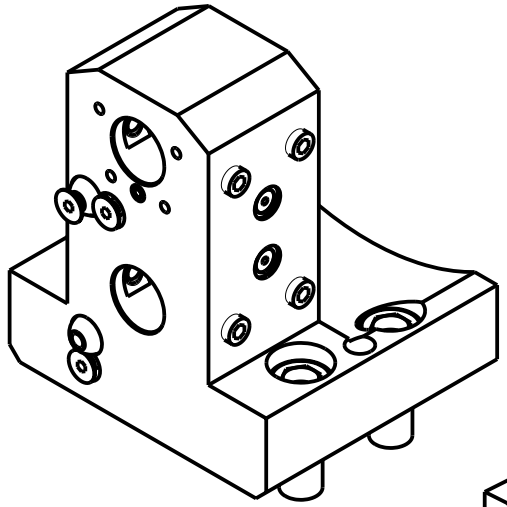

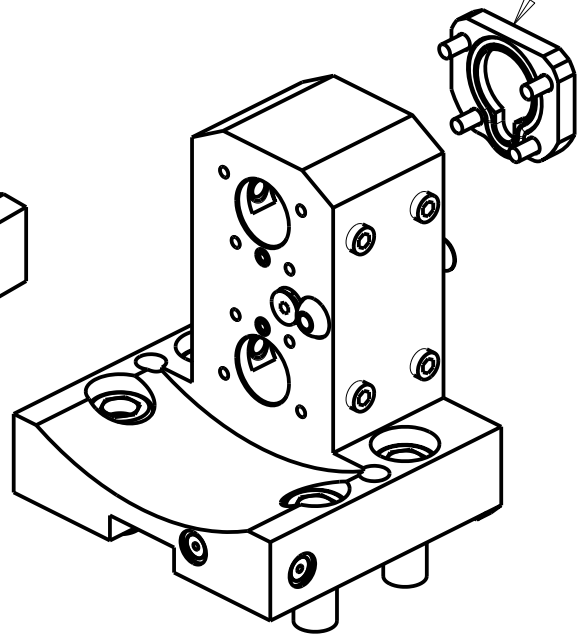

KIT ADDUZIONE INTERNA (OPZIONALE)
KIT FOR INTERNAL COOLANT (OPTIONAL)
KIT FUER INTERNE KUEHLMITTELZUFUHR (OPTIONAL)
Ø20 cod. KIT1000028

Cod. MT	N°Utensili N°Tools N°Werkzeuge	Lubrificazione int. opzionale Coolant through optional Innenkuehlung Optional	Lubrificazione est. Ext. coolant Aussenkuehlung	Misure Dimensions Masse	D
MSL0522000	2	X	X	mm	20

PER BOCCOLE DI RIDUZIONE VEDI PAG. TBL150-1-00
FOR REDUCING BUSHINGS SEE PAGE TBL150-1-00
FUER REDUZIERBUCHSE SIEHE SEITE TBL150-1-00

CMZ

MOD: TA15-20-25-30M/Y/MS/MY/YS - TC15-20-25-30-35M/Y/MS/MY/YS - TD15-20-25-30-35-45-55M/Y/MS/MY/YS

PORTAUTENSILE ASSIALE ARRETRATO PER BARENO 2 POSIZIONI Ø20mm
Axial 2 position rear set boring bar holder Ø20mm
Axial Bohrhalter 2 Positionen zurueckversetzt Ø20mm

M.T. srl
Via Casino Albini 480
Tel. 0541/956034-957884
Fax 0541/956341
47842 S. GIOVANNI IN M. (RN)
e-mail: mtma@mtmarchetti.com
http://www.mtmarchetti.com

Subject to change without notice.

04/2022

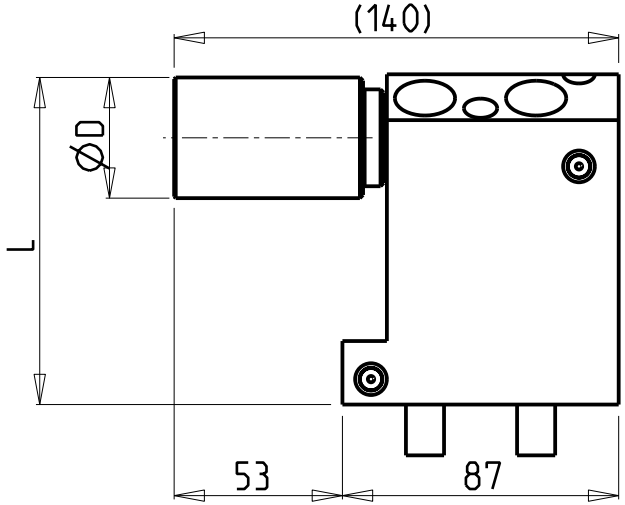

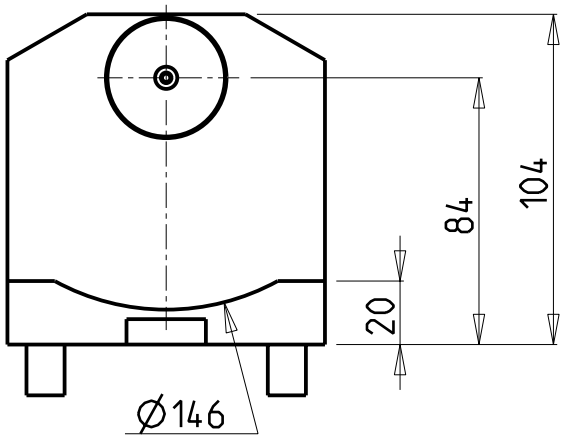

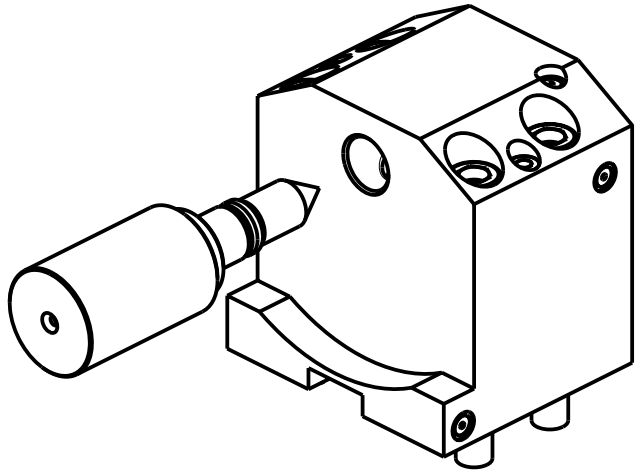

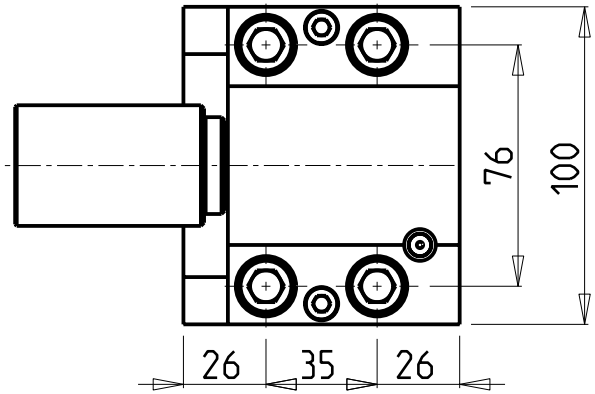

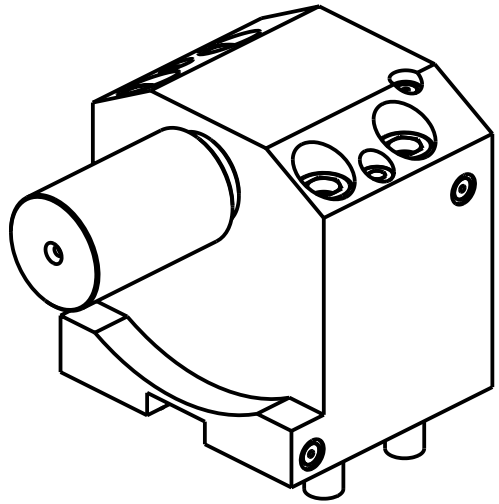

Cod. MT	N°Utensili N°Tools N°Werkzeuge	D	L
MSL0280100	1	38	103
MSL0280100L	1	2"	109.4

CMZ

MOD:TL25AM/AMS/BM/BMS - TL20M/MS/TM - TA15-20-25-30M/Y/MS/MY/YS - TC15-20-25-30-35M/Y/MS/MY/YS
TD15-20-25-30-35-45-55M/Y/MS/MY/YS

CONTROPUNTA PER CONTROMANDRINO
Tailstock for subspindle
Gegenspintz fuer Gegenspindel

M.T. srl
Via Casino Albini 480
Tel. 0541/956034-957884
Fax 0541/956341
47842 S. GIOVANNI IN M. (RN)
e-mail: mtma@mtmarchetti.com
http://www.mtmarchetti.com

Subject to change without notice.

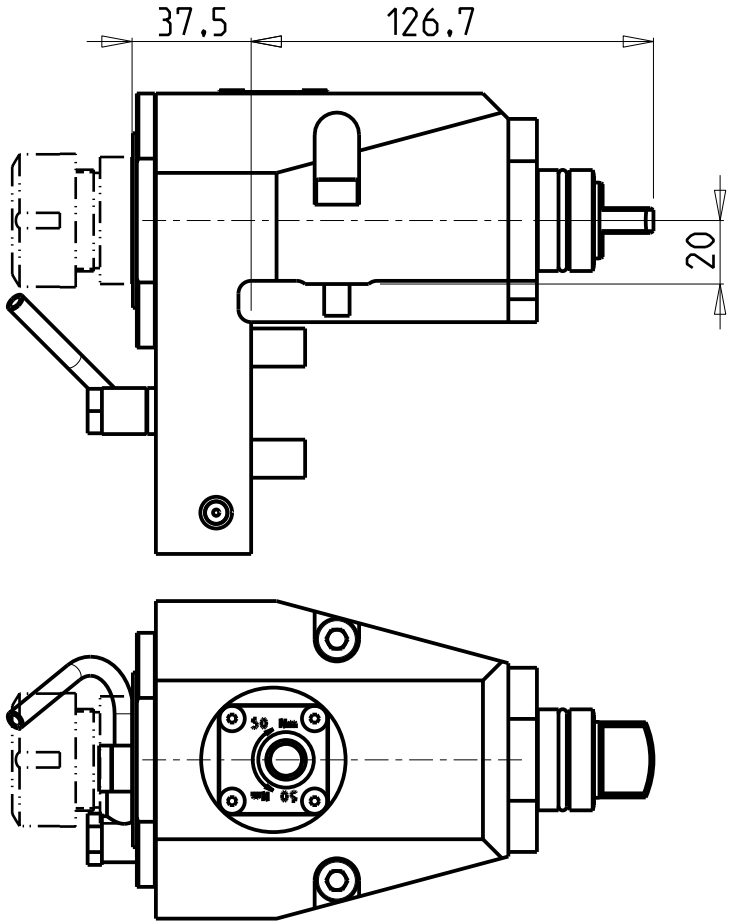

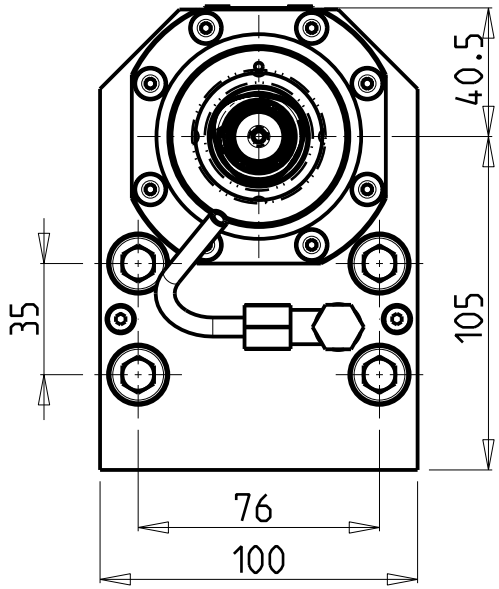

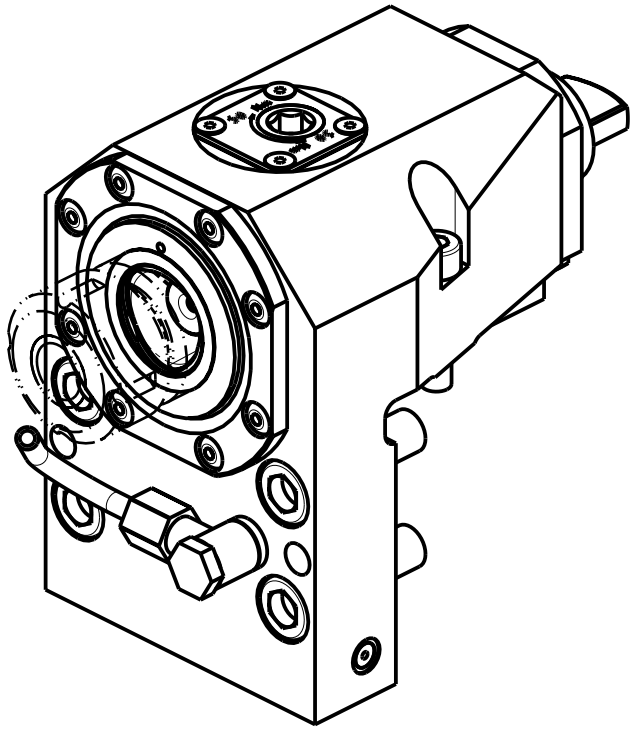

Cod. MT	TAGLIA Size Masse	I	RPM	Coppia Max Max Torque Max Drehmoment	Lubrificazione int. Coolant through Innenkuehlung	Lubrificazione est. Ext. coolant Aussenkuehlung
MSL0060140	C4	1:1	6000	105Nm	-	X
MSL0060240	C4	1:1	6000	105Nm	P=70bar	X

CMZ

MOD:TL25AM/AMS/BM/BMS - TL20M/MS/TM - TA15-20-25-30M/Y/MS/MY/YS - TC15-20-25-30-35M/Y/MS/MY/YS
TD15-20-25-30-35-45-55M/Y/MS/MY/YS

MODULO MOTORIZZATO RADIALE MT CAPTO
Radial driven tool MT CAPTO
Radial angetriebenes Werkzeug MT CAPTO

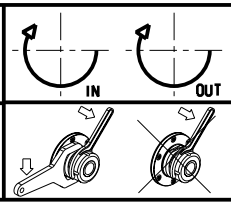

M.T. srl
Via Casino Albini 480
Tel. 0541/956034-957884
Fax 0541/956341
47842 S. GIOVANNI IN M. (RN)
e-mail: mtma@mtmarchetti.com
http://www.mtmarchetti.com

MT®

Subject to change without notice.

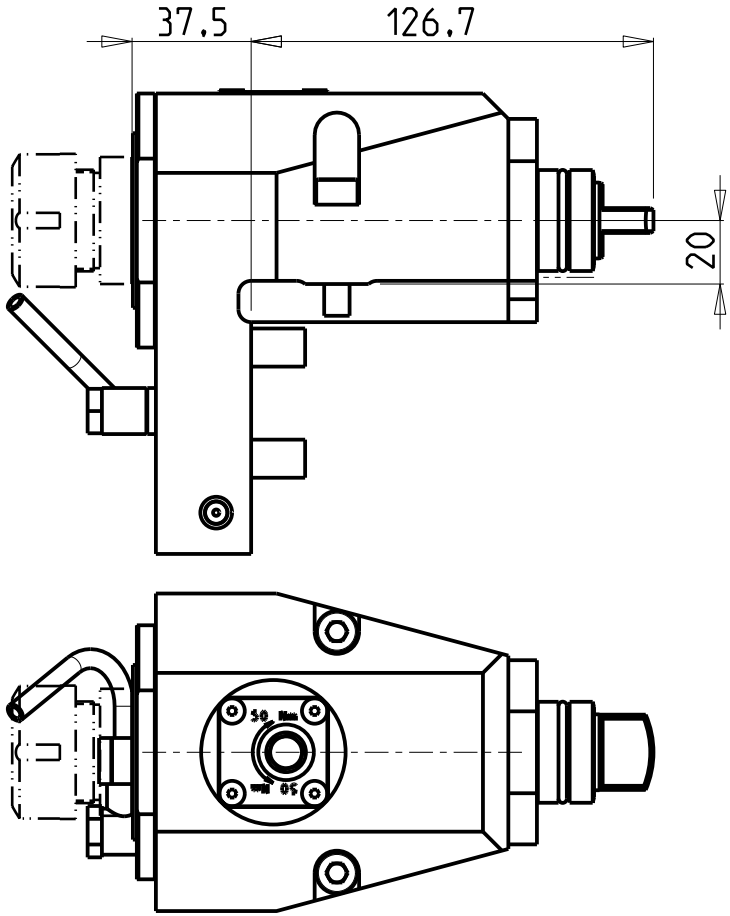

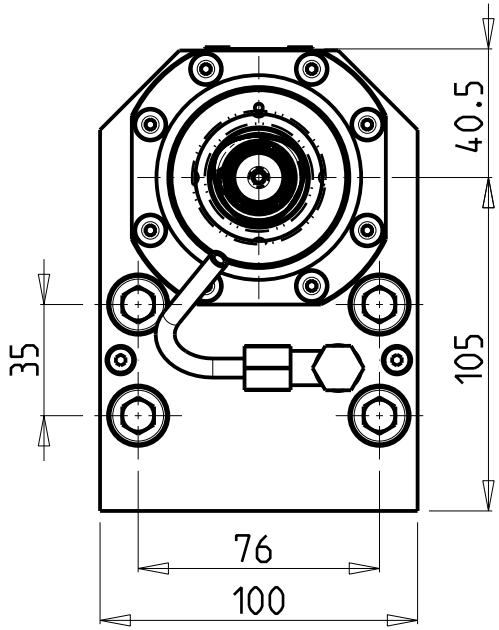

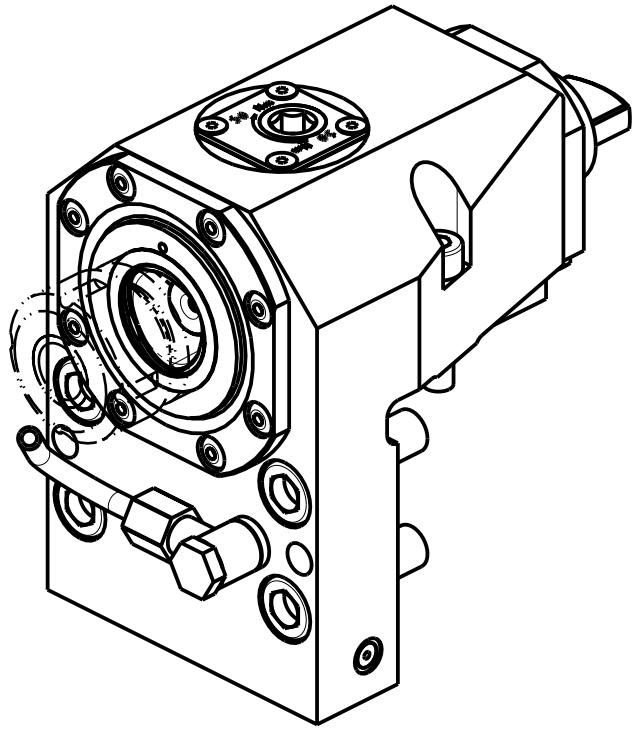

Cod. MT	TAGLIA Size Masse	I	RPM MAX	Coppia Max Max Torque Max Drehmoment	Lubr.interna Coolant through Innenkuehlung	Lubr.esterna Ext. coolant Aussenkuehlung
MSL0320140	C4	1:1	12000	105Nm	-	X
MSL0320240	C4	1:1	10000	105Nm	P=70bar	X

CMZ

MOD:TL25AM/AMS/BM/BMS - TL20M/MS/TM - TA15-20-25-30M/Y/MS/MY/YS - TC15-20-25-30-35M/Y/MS/MY/YS
TD15-20-25-30-35-45-55M/Y/MS/MY/YS

MODULO MOTORIZZATO RADIALE 12000 RPM MT CAPTO
Radial driven tool 12000 rpm MT CAPTO
Radial angetriebenes Werkzeug 12000 rpm MT CAPTO

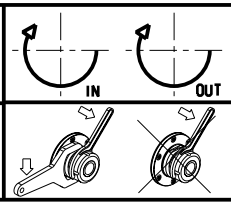

M.T. srl
Via Casino Albini 480
Tel. 0541/956034-957884
Fax 0541/956341
47842 S. GIOVANNI IN M. (RN)
e-mail: mtma@mtmarchetti.com
http://www.mtmarchetti.com

MT®

Subject to change without notice.

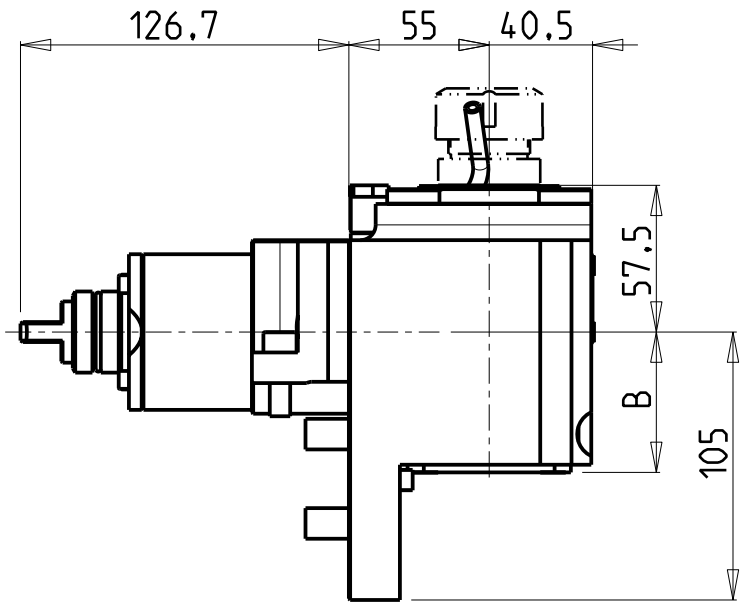

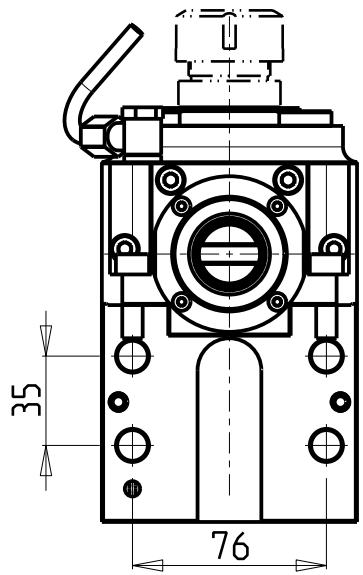

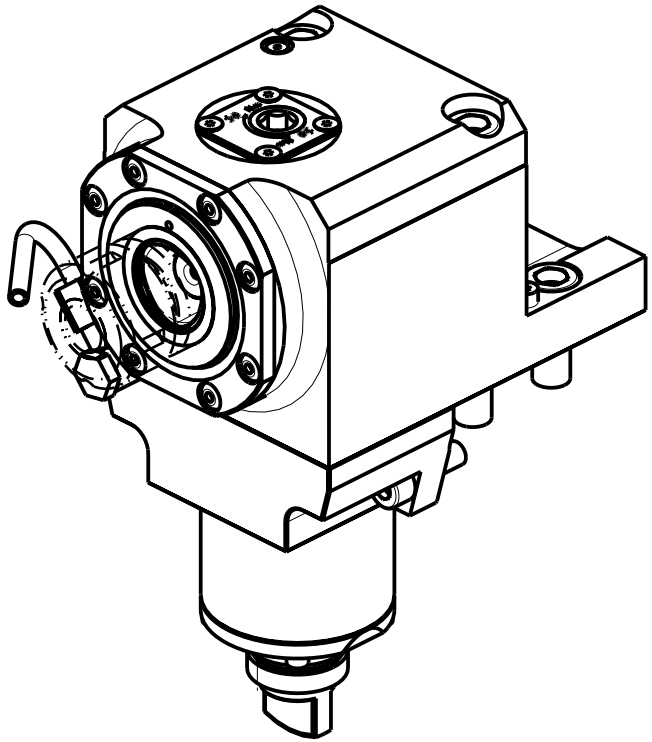

Cod. MT	TAGLIA Size Masse	I	RPM	Coppia Max Max Torque Max Drehmoment	Lubr.interna Coolant through Innenkuehlung	Lubr.esterna Ext. coolant Aussenkuehlung	B
MSL0050140	C4	1:1	6000	105Nm		X	55
MSL0050240	C4	1:1	6000	105Nm	P=70bar	X	67.5

CMZ

MOD:TL25AM/AMS/BM/BMS - TL20M/MS/TM - TA15-20-25-30M/Y/MS/MY/YS - TC15-20-25-30-35M/Y/MS/MY/YS
TD15-20-25-30-35-45-55M/Y/MS/MY/YS

MODULO MOTORIZZATO ASSIALE MT CAPTO
Axial driven tool MT CAPTO
Axial angetriebenes Werkzeug MT CAPTO

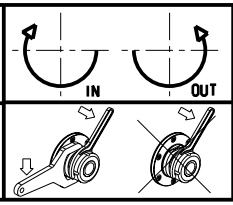

M.T. srl
Via Casino Albini 480
Tel. 0541/956034-957884
Fax 0541/956341
47842 S. GIOVANNI IN M. (RN)
e-mail: mtma@mtmarchetti.com
http://www.mtmarchetti.com

PAGINA CMZ150-B-40

Subject to change without notice.

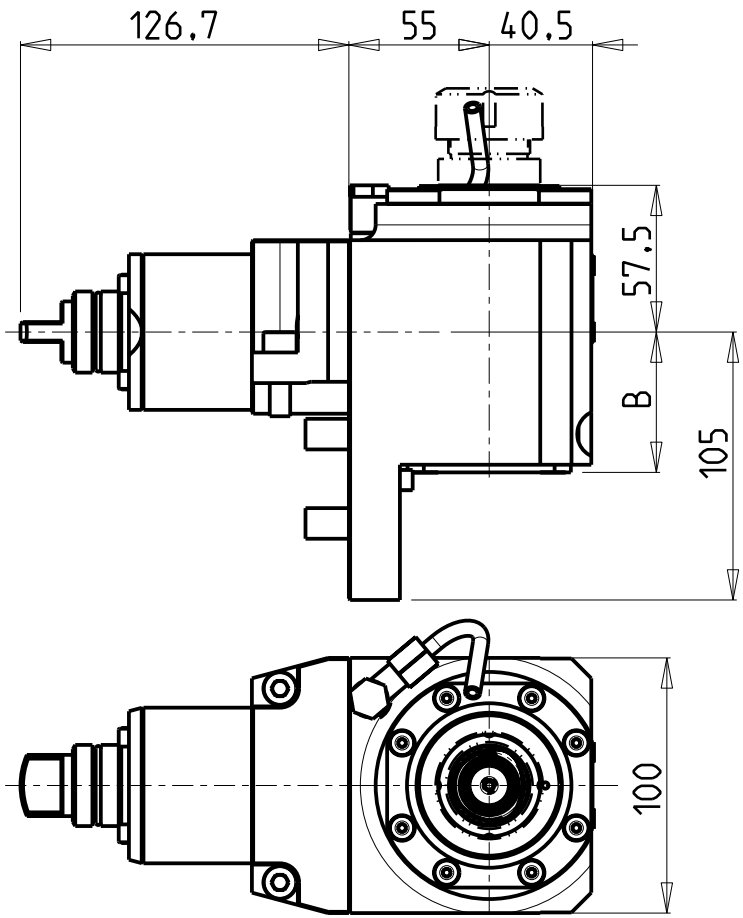

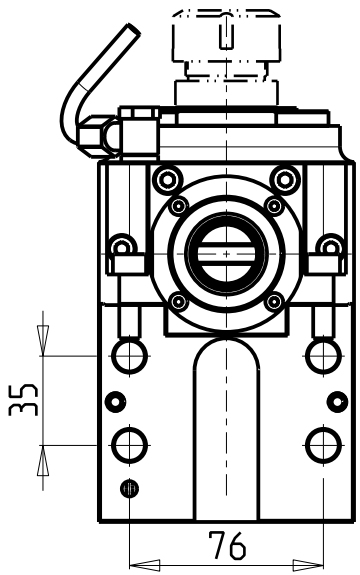

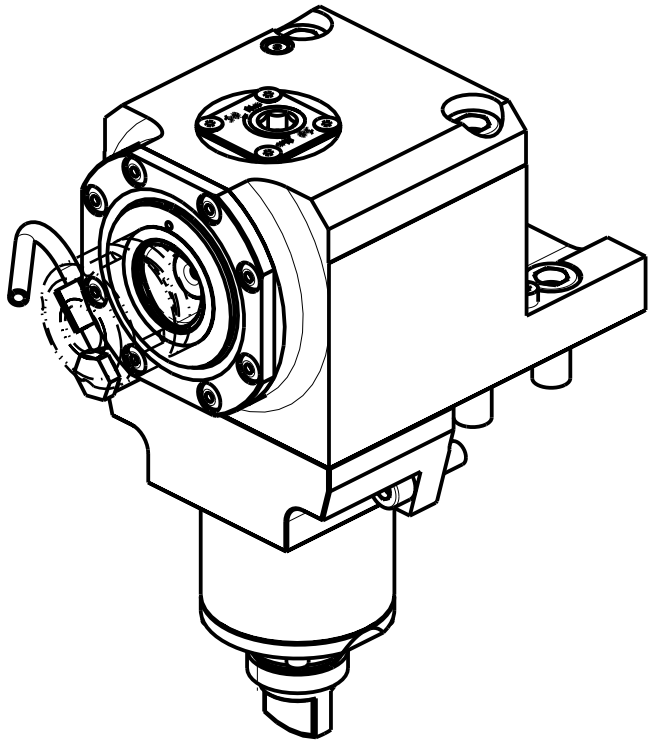

Cod. MT	TAGLIA Size Masse	I	RPM	Coppia Max Max Torque Max Drehmoment	Lubr.interna Coolant through Innenkuehlung	Lubr.esterna Ext. coolant Aussenkuehlung	B
MSL0310140	C4	1:1	12000	105Nm	-	X	55
MSL0310240	C4	1:1	12000	105Nm	P=70bar	X	67.5

CMZ

MOD:TL25AM/AMS/BM/BMS - TL20M/MS/TM - TA15-20-25-30M/Y/MS/MY/YS - TC15-20-25-30-35M/Y/MS/MY/YS
TD15-20-25-30-35-45-55M/Y/MS/MY/YS

MODULO MOTORIZZATO ASSIALE 12000 RPM MT CAPTO
Axial driven tool 12000 rpm MT CAPTO
Axial angetriebenes Werkzeug 12000 rpm MT CAPTO

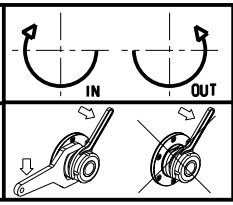

M.T. srl
Via Casino Albini 480
Tel. 0541/956034-957884
Fax 0541/956341
47842 S. GIOVANNI IN M. (RN)
e-mail: mtma@mtmarchetti.com
http://www.mtmarchetti.com

MT®

Subject to change without notice.

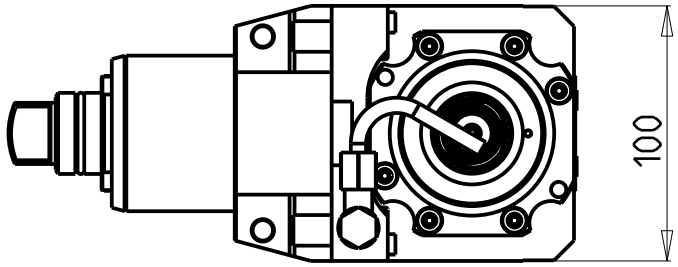

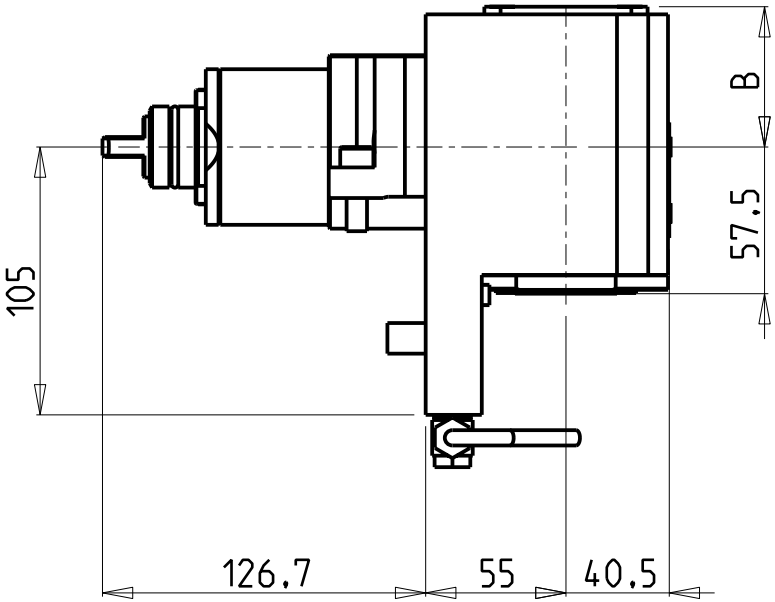

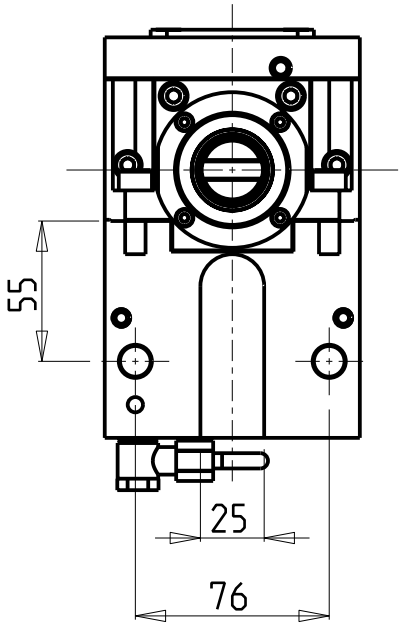

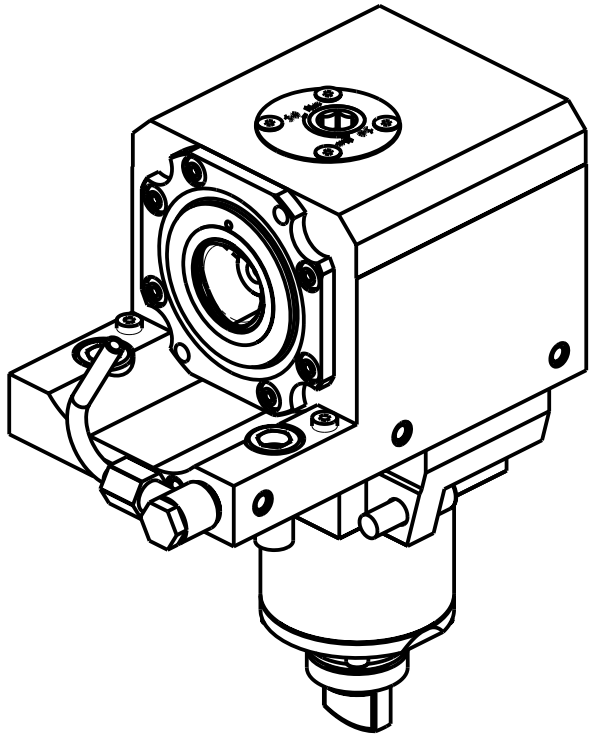

Cod. MT	TAGLIA Size Masse	I	RPM	Coppia Max Max Torque Max Drehmoment	Lubr.interna Coolant through Innenkuehlung	Lubr.esterna Ext. coolant Aussenkuehlung	B
MSL0590140	C4	1:1	6000	105Nm	-	X	55
MSL0590240	C4	1:1	6000	105Nm	P=70bar	X	67.5

CMZ

MOD:TL25AM/AMS/BM/BMS - TL20M/MS/TM - TA15-20-25-30M/Y/MS/MY/YS - TC15-20-25-30-35M/Y/MS/MY/YS
TD15-20-25-30-35-45-55M/Y/MS/MY/YS

MODULO MOTORIZZATO ASSIALE PER CONTROMANDRINO MT CAPTO
Axial driven tool for subspindle MT CAPTO
Axial angetriebenes Werkzeug fuer Gegenspindel MT CAPTO

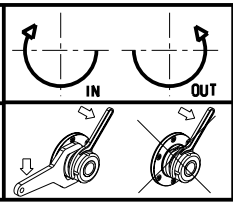

M.T. srl
Via Casino Albini 480
Tel. 0541/956034-957884
Fax 0541/956341
47842 S. GIOVANNI IN M. (RN)
e-mail: mtma@mtmarchetti.com
http://www.mtmarchetti.com

MT®

Subject to change without notice.

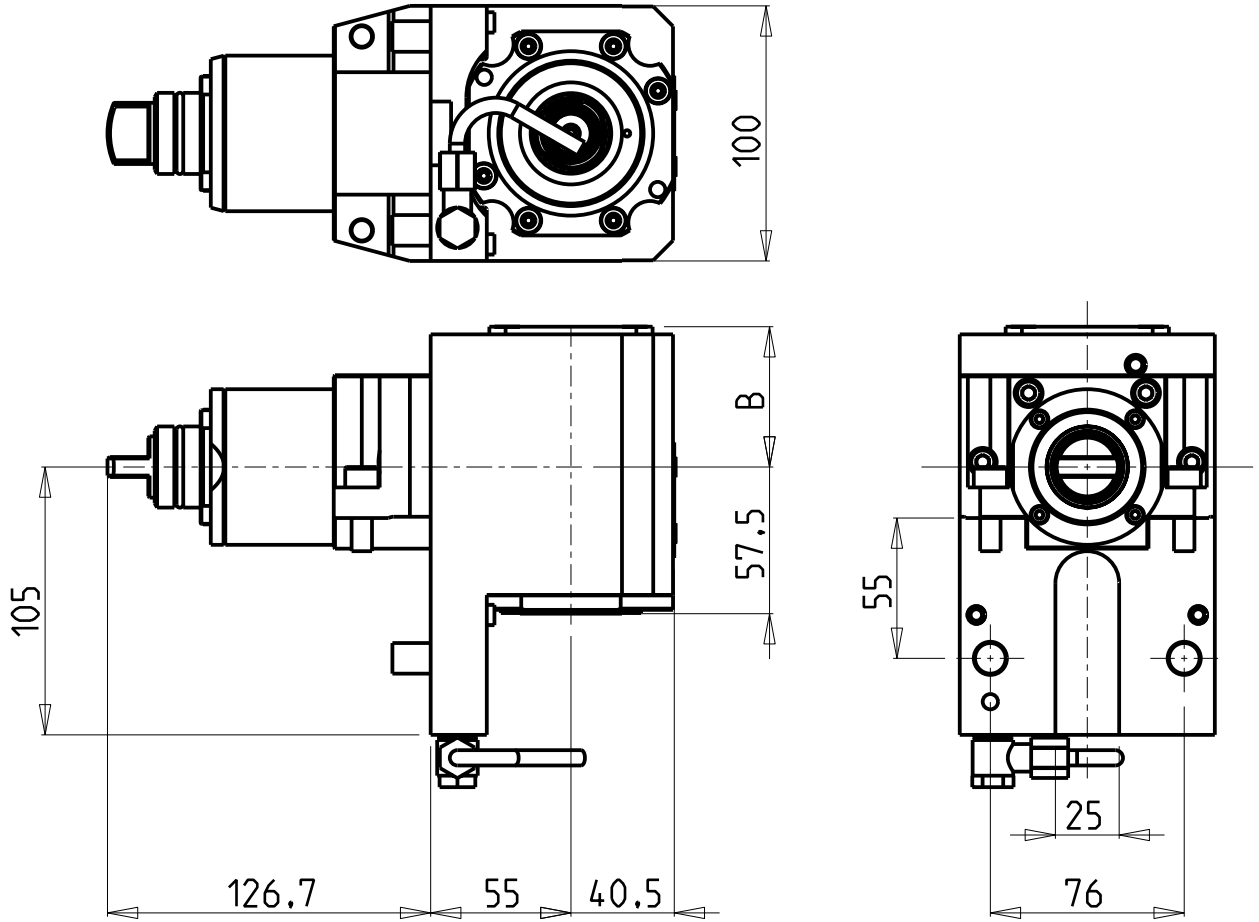

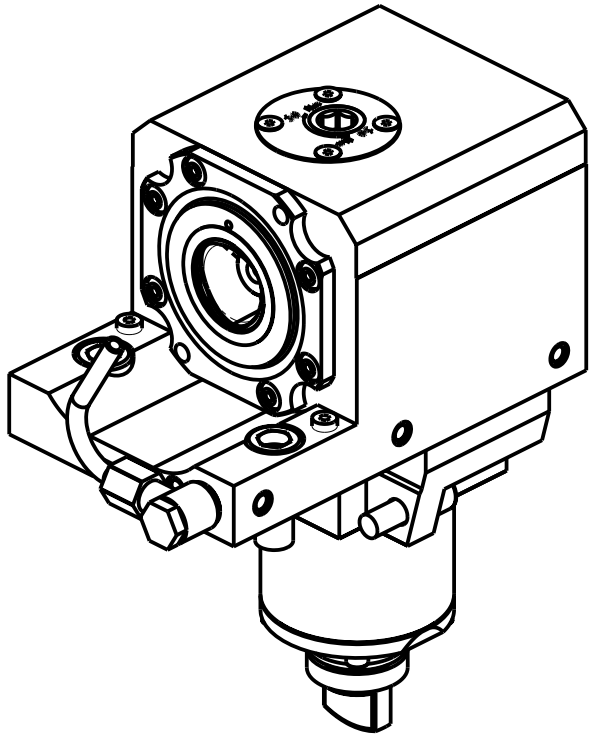

Cod. MT	TAGLIA Size Masse	I	RPM	Coppia Max Max Torque Max Drehmoment	Lubr.interna Coolant through Innenkuehlung	Lubr.esterna Ext. coolant Aussenkuehlung	B
MSL0600140	C4	1:1	12000	105Nm	-	X	55
MSL0600240	C4	1:1	12000	105Nm	P=70bar	X	67.5

CMZ

MOD:TL25AM/AMS/BM/BMS - TL20M/MS/TM - TA15-20-25-30M/Y/MS/MY/YS - TC15-20-25-30-35M/Y/MS/MY/YS
TD15-20-25-30-35-45-55M/Y/MS/MY/YS

MODULO MOTORIZZATO ASSIALE PER CONTROMANDRINO 12000 RPM MT CAPTO
Axial driven tool for subspindle 12000 rpm MT CAPTO
Axial angetriebenes Werkzeug fuer Gegenspindel 12000 rpm MT CAPTO

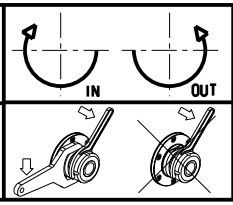

M.T. srl
Via Casino Albini 480
Tel. 0541/956034-957884
Fax 0541/956341
47842 S. GIOVANNI IN M. (RN)
e-mail: mtma@mtmarchetti.com
http://www.mtmarchetti.com

MT®

Subject to change without notice.

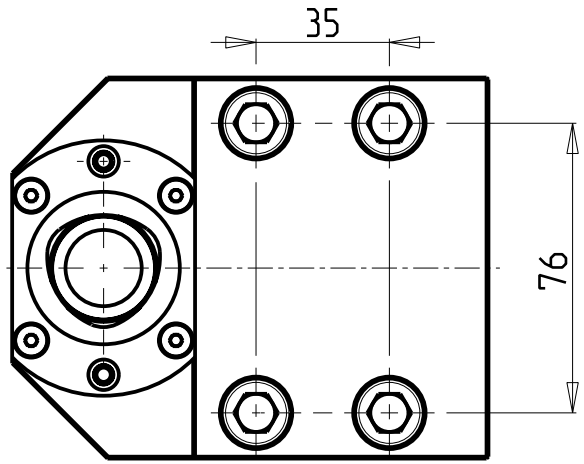

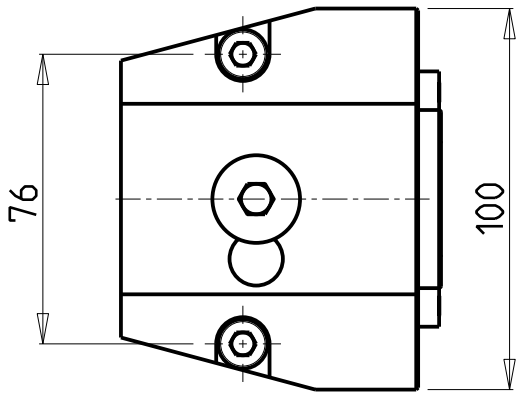

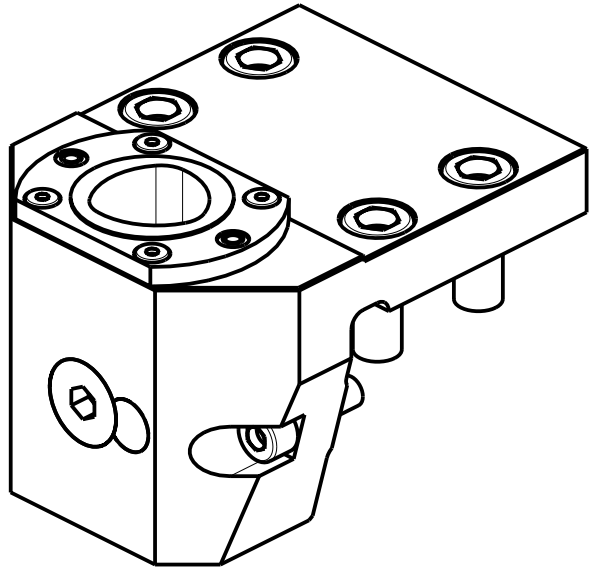

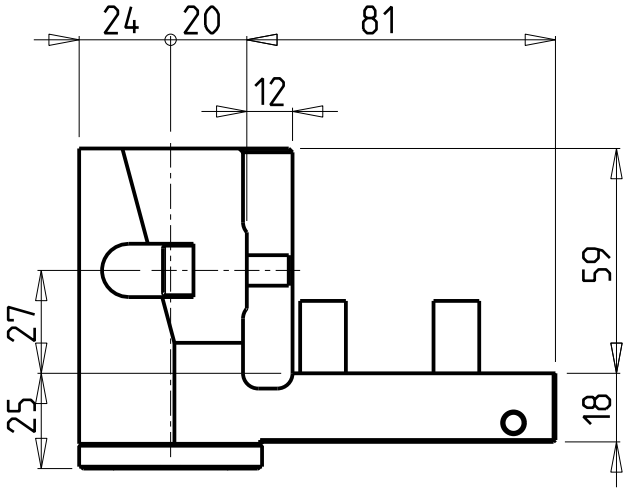

Cod. MT	N°Utensili N°Tools N°Werkzeuge	Lubrificazione int. Coolant through Innenkuehlung	TAGLIA Size Masse
MSL0044010	1	X	C4

VERSIONE DESTRA (RC)
RIGHT VERSION (RC)
RECHTE-VERSION (RC)

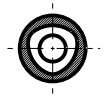

VERSIONE SINISTRA (LC)
LEFT VERSION (LC)
LINKE-VERSION (LC)

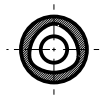

PER ORDINARE LA VERSIONE SX AGGIUNGERE "LC" AL CODICE IN TABELLA.
ES: MNL0464010 DIVENTA MNL0464010LC

TO ORDER LEFT VERSION ADD A "LC" IN THE CODE-CHARTS.
EXAMPLE: MNL0464010 BECOMES MNL0464010LC

UM DIE LINKE-VERSION ZU BESTELLEN, BEI DER ARTIKELBEZEICHNUNG "LC" HINZUFUEGEN.
BEISPIEL: MNL0464010 WIRD DANN MNL0464010LC

CMZ

MOD:TL25AM/AMS/BM/BMS - TL20M/MS/TM - TA15-20-25-30M/Y/MS/MY/YS - TC15-20-25-30-35M/Y/MS/MY/YS
TD15-20-25-30-35-45-55M/Y/MS/MY/YS

PORTAUTENSILE RADIALE SINGOLO ARRETRATO MT CAPTO
Radial single rear-set static tool MT CAPTO
Radial Single-Werkzeughalter zurueckversetzt MT CAPTO

M.T. srl
Via Casino Albini 480
Tel. 0541/956034-957884
Fax 0541/956341
47842 S. GIOVANNI IN M. (RN)
e-mail: mtma@mtmarchetti.com
http://www.mtmarchetti.com

Subject to change without notice.

04/2022

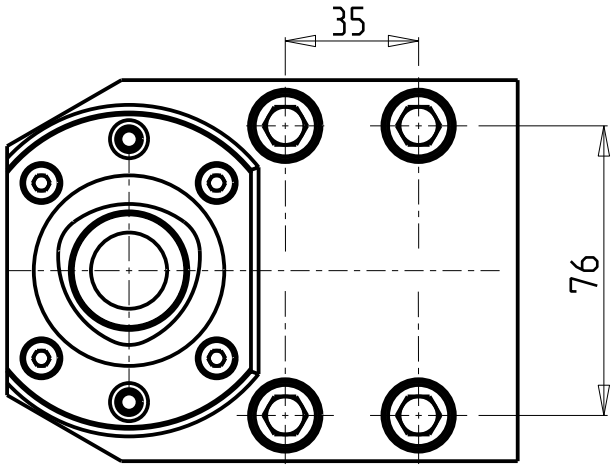

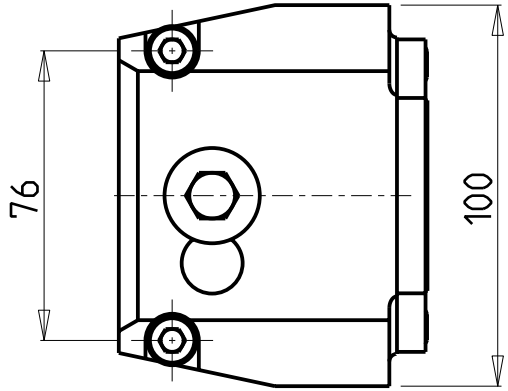

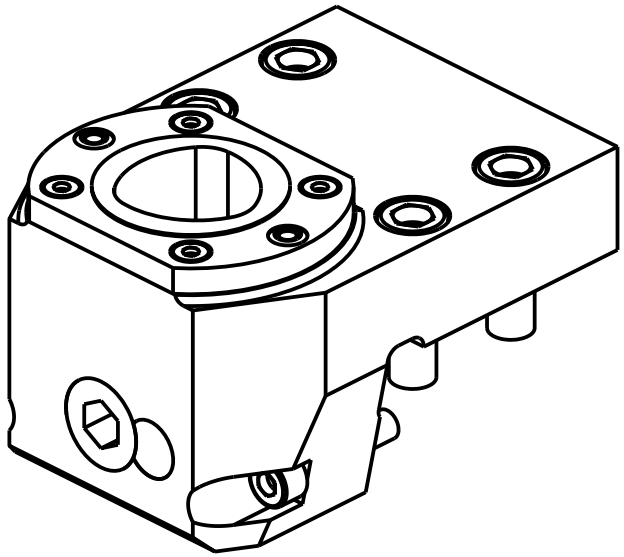

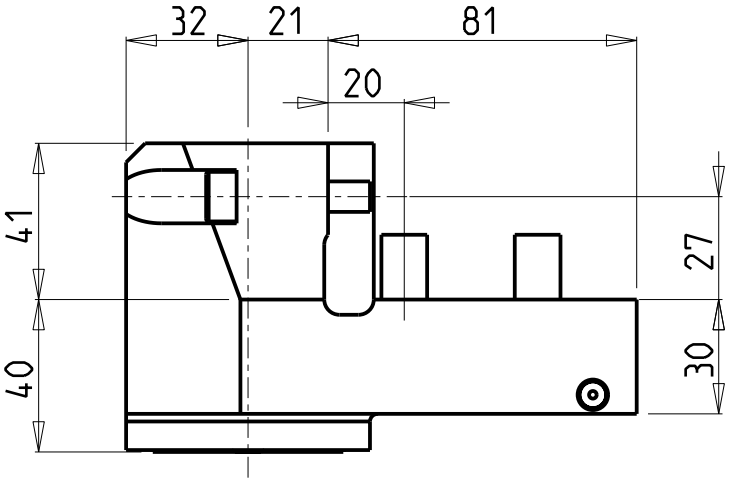

Cod. MT	N°Utensili N°Tools N°Werkzeuge	Lubrificazione int. Coolant through Innenkuehlung	TAGLIA Size Masse
MSL0045010	1	X	C5

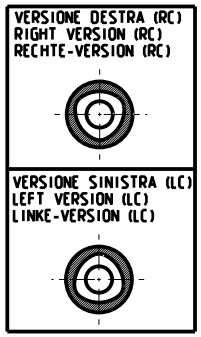

PER ORDINARE LA VERSIONE SX AGGIUNGERE "LC" AL CODICE IN TABELLA.
ES: MSL0045010 DIVENTA MSL0045010LC

TO ORDER LEFT VERSION ADD A "LC" IN THE CODE-CHARTS.
EXAMPLE: MSL0045010 BECOMES MSL0045010LC

UM DIE LINKE-VERSION ZU BESTELLEN, BEI DER ARTIKELBEZEICHNUNG "LC" HINZUFUEGEN.
BEISPIEL: MSL0045010 WIRD DANN MSL0045010LC

CMZ

MOD:TL25AM/AMS/BM/BMS - TL20M/MS/TM - TA15-20-25-30M/Y/MS/MY/YS - TC15-20-25-30-35M/Y/MS/MY/YS
TD15-20-25-30-35-45-55M/Y/MS/MY/YS

PORTAUTENSILE RADIALE SINGOLO ARRETRATO MT CAPTO
Radial single rear-set static tool MT CAPTO
Radial Single-Werkzeughalter zurueckversetzt MT CAPTO

M.T. srl
Via Casino Albini 480
Tel. 0541/956034-957884
Fax 0541/956341
47842 S. GIOVANNI IN M. (RN)
e-mail: mtma@mtmarchetti.com
http://www.mtmarchetti.com

Subject to change without notice.

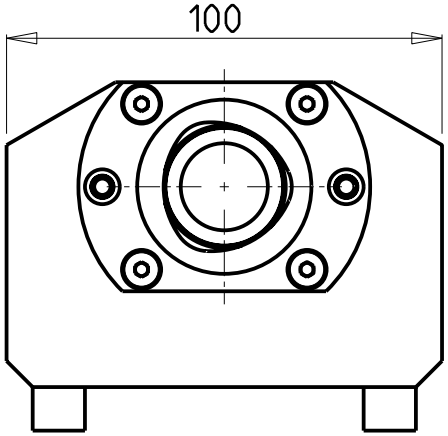

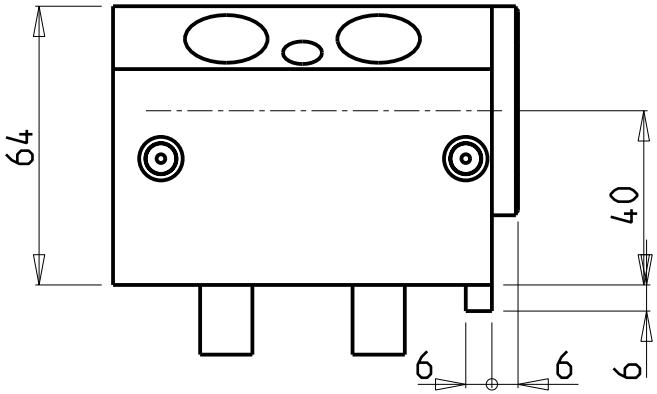

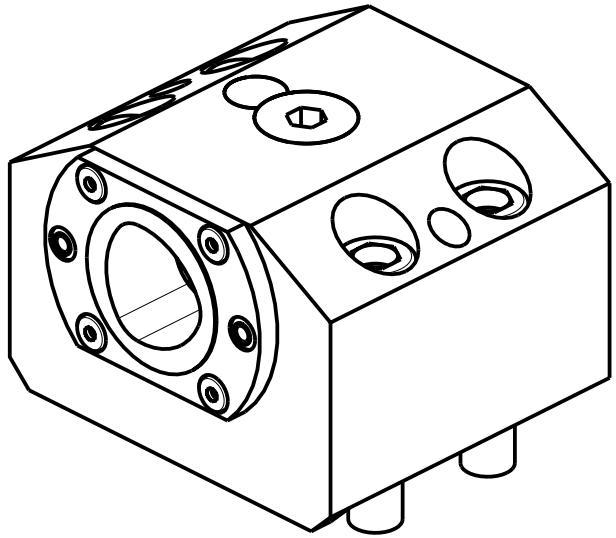

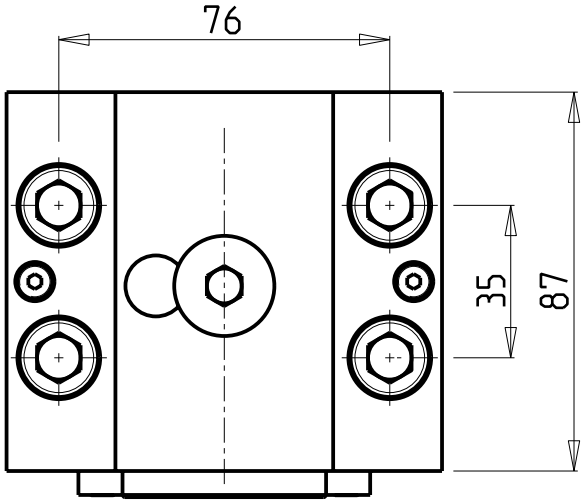

Cod. MT	N°Utensili N°Tools N°Werkzeuge	Lubrificazione int. Coolant through Innenkuehlung	TAGLIA Size Masse
MSL0034010	1	X	C4

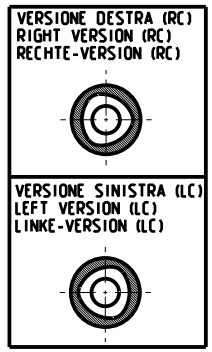

PER ORDINARE LA VERSIONE SX AGGIUNGERE "LC" AL CODICE IN TABELLA.
ES: MNL0464010 DIVENTA MNL0464010LC

TO ORDER LEFT VERSION ADD A "LC" IN THE CODE-CHARTS.
EXAMPLE: MNL0464010 BECOMES MNL0464010LC

UM DIE LINKE-VERSION ZU BESTELLEN, BEI DER ARTIKELBEZEICHNUNG "LC" HINZUFUEGEN.
BEISPIEL: MNL0464010 WIRD DANN MNL0464010LC

CMZ

MOD:TL25AM/AMS/BM/BMS - TL20M/MS/TM - TA15-20-25-30M/Y/MS/MY/YS - TC15-20-25-30-35M/Y/MS/MY/YS
TD15-20-25-30-35-45-55M/Y/MS/MY/YS

PORTAUTENSILE ASSIALE SINGOLO MT CAPTO
Axial single static tool MT CAPTO
Axial Single-Werkzeughalter MT CAPTO

M.T. srl
Via Casino Albini 480
Tel. 0541/956034-957884
Fax 0541/956341
47842 S. GIOVANNI IN M. (RN)
e-mail: mtma@mtmarchetti.com
http://www.mtmarchetti.com

Subject to change without notice.

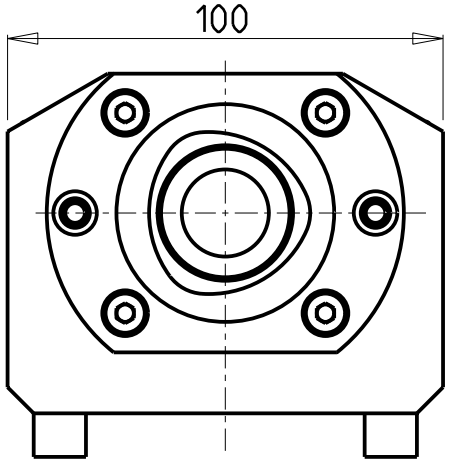

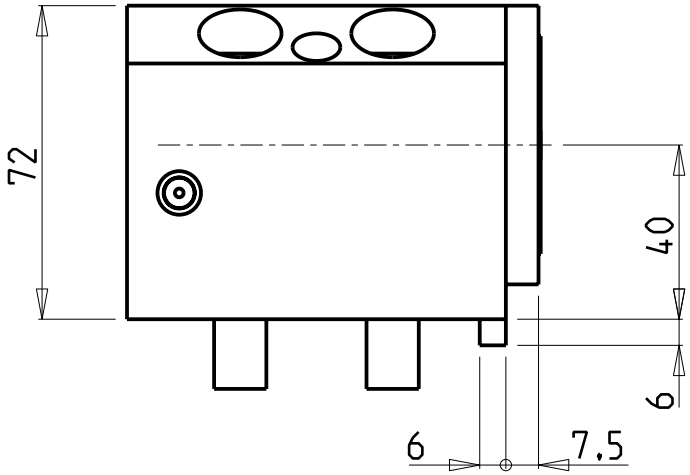

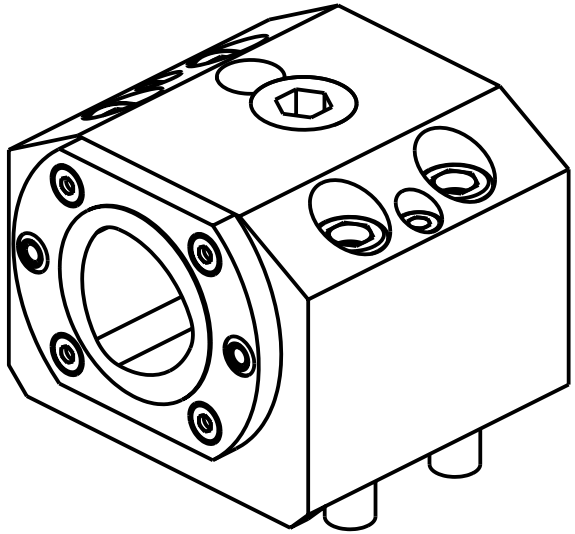

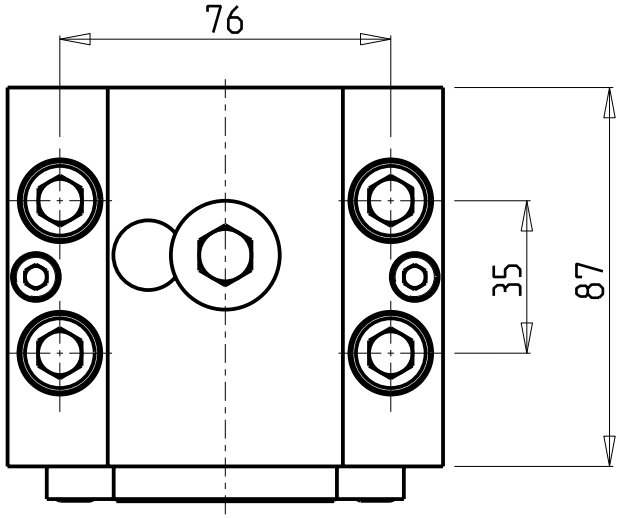

Cod. MT	N°Utensili N°Tools N°Werkzeuge	Lubrificazione int. Coolant through Innenkuehlung	TAGLIA Size Masse
MSL0035010	1	X	C5

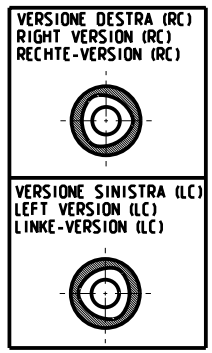

PER ORDINARE LA VERSIONE SX AGGIUNGERE "LC" AL CODICE IN TABELLA.
ES: MSL0035010 DIVENTA MSL0035010LC

TO ORDER LEFT VERSION ADD A "LC" IN THE CODE-CHARTS.
EXAMPLE: MSL0035010 BECOMES MSL0035010LC

UM DIE LINKE-VERSION ZU BESTELLEN, BEI DER ARTIKELBEZEICHNUNG "LC" HINZUFUEGEN.
BEISPIEL: MSL0035010 WIRD DANN MSL0035010LC

CMZ

MOD:TL25AM/AMS/BM/BMS - TL20M/MS/TM - TA15-20-25-30M/Y/MS/MY/YS - TC15-20-25-30-35M/Y/MS/MY/YS
TD15-20-25-30-35-45-55M/Y/MS/MY/YS

PORTAUTENSILE ASSIALE SINGOLO MT CAPTO
Axial single static tool MT CAPTO
Axial Single-Werkzeughalter MT CAPTO

M.T. srl
Via Casino Albini 480
Tel. 0541/956034-957884
Fax 0541/956341
47842 S. GIOVANNI IN M. (RN)
e-mail: mtma@mtmarchetti.com
http://www.mtmarchetti.com

Subject to change without notice.

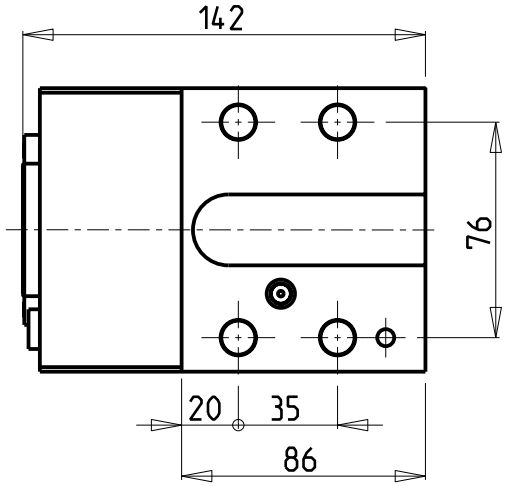

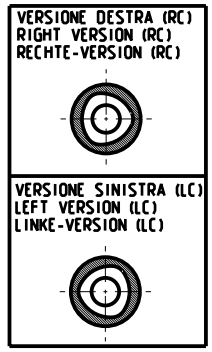

PER ORDINARE LA VERSIONE SX AGGIUNGERE "LC" AL CODICE IN TABELLA.
ES: MSL0564020 DIVENTA MSL0564020LC

TO ORDER LEFT VERSION ADD A "LC" IN THE CODE-CHARTS.
EXAMPLE: MSL0564020 BECOMES MSL0564020LC

UM DIE LINKE-VERSION ZU BESTELLEN, BEI DER ARTIKELBEZEICHNUNG "LC" HINZUFUEGEN.
BEISPIEL: MSL0564020 WIRD DANN MSL0564020LC

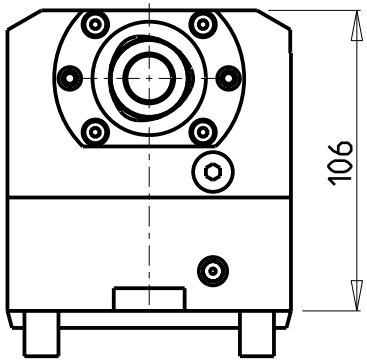

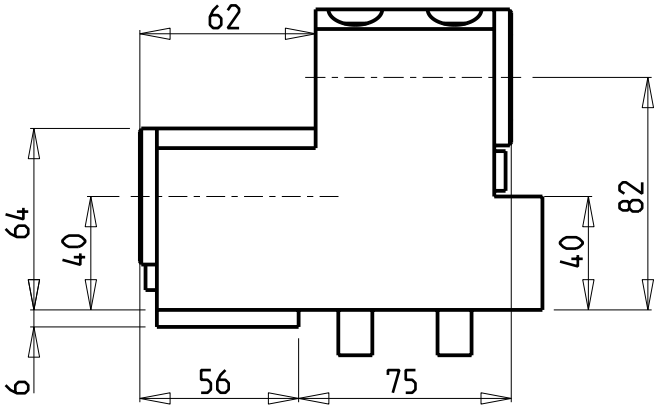

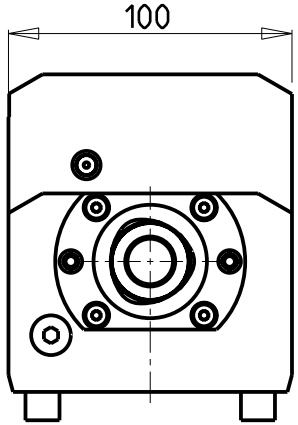

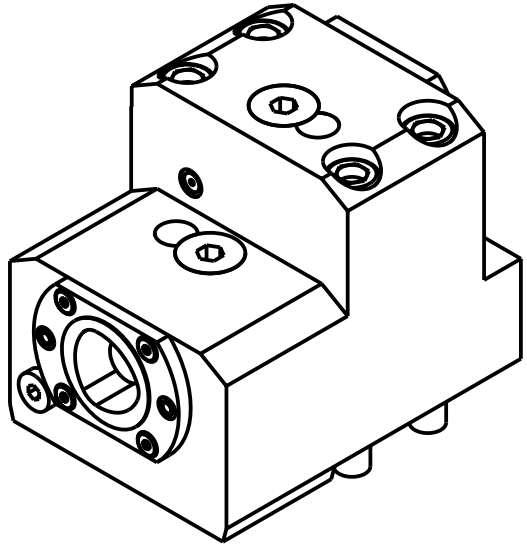

Cod. MT	N°Utensili N°Tools N°Werkzeuge	Lubrificazione int. Coolant through Innenkuehlung	Lubrificazione est. Ext. coolant Aussenkuehlung	TAGLIA Size Masse
MSL0564020	1+1	X	X	C4

CMZ

MOD:TL25AM/AMS/BM/BMS - TL20M/MS/TM - TA15-20-25-30M/Y/MS/MY/YS - TC15-20-25-30-35M/Y/MS/MY/YS
TD15-20-25-30-35-45-55M/Y/MS/MY/YS

PORTAUTENSILE ASSIALE BISPORGENTE MT CAPTO
Axial opposite face twin static tool MT CAPTO
Axial Halter halb vorspringend mit MT CAPTO

M.T. srl
Via Casino Albini 480
Tel. 0541/956034-957884
Fax 0541/956341
47842 S. GIOVANNI IN M. (RN)
e-mail: mtma@mtmarchetti.com
http://www.mtmarchetti.com

Subject to change without notice.

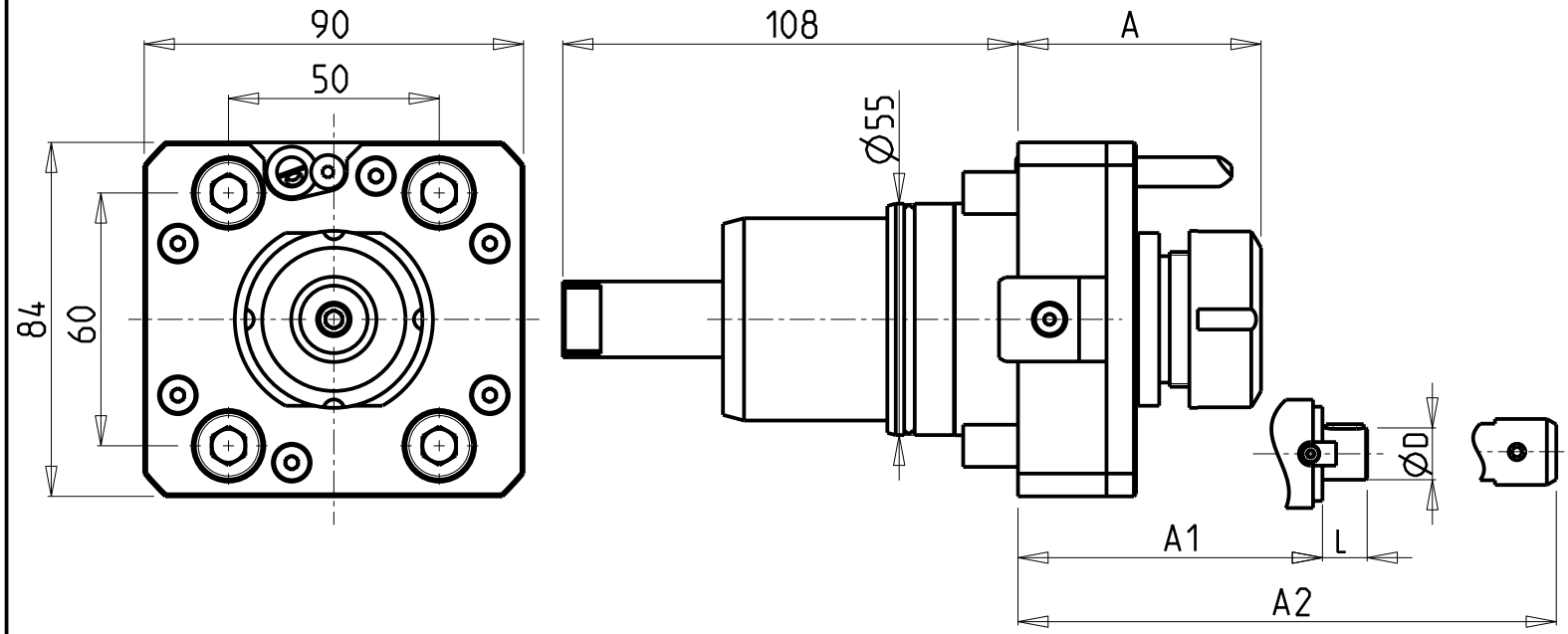

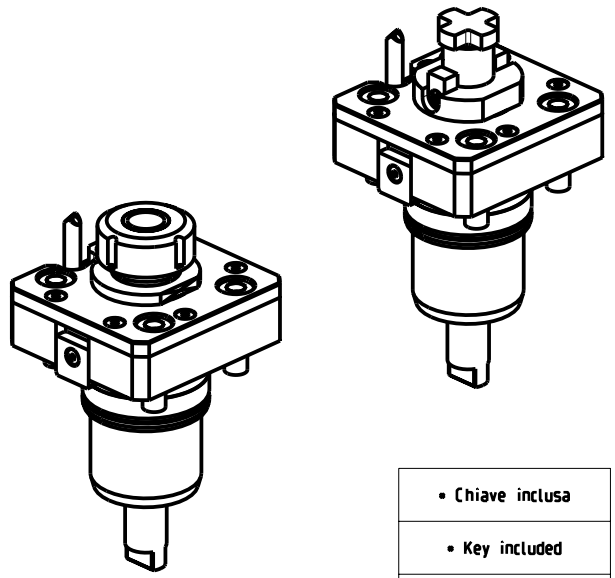

• Chiave inclusa
• Key included
• Schluessel inbegriffen

Cod. MT	Mandrino Spindle Spindel	I	RPM	Coppia Max Max Torque Max Drehmoment	Lubrificazione int. Coolant through Innenkuhleung	Lubrificazione est. Ext. coolant Aussenkuehlung	A	A1	A2	D	L	CHIAVI NON INCLUSE Keys not included Schluessel nicht einbegriffen		
NKM0700325	ERA25	1:1	6000	50Nm	-	X	51	-	-	-	-	CHUB41	CHUB27	-
NKM1830432	ERA32	1:1	6000	50Nm	P=70bar	X	66	-	-	-	-	OKU0290009•	CHTAER32ZC •	CHUB30
NKM1830125	ER25	1:1	6000	50Nm	-	X	59.16	-	-	-	-	OKU0290009•	CHSTER25	-
NKM1830225	ER25	1:1	6000	50Nm	P=70bar	X	73.96	-	-	-	-	OKU0290009•	CHSTER25	-
NKM1830132	ER32	1:1	6000	50Nm	-	X	64.96	-	-	-	-	OKU0290009•	CHSTER32	-
NKM1830232	ER32	1:1	6000	50Nm	P=70bar	X	78.46	-	-	-	-	OKU0290009•	CHSTER32	-
NKM0701617	Ø16x17	1:1	6000	50Nm	-	X	-	38	-	16	17	CHUB41	CH_VTCROCE_M08 •	-
NKM1830522	Ø22x19	1:1	6000	50Nm	-	X	-	39	-	22	19	OKU0290009•	CH_VTCROCE_M10 •	-
NKM0702519	Ø1"x19	1:1	6000	50Nm	-	X	-	42	-	1"	19	CHUB41	CH_VTCROCE_M12 •	-
NKM0700516	WELDON 16	1:1	6000	50Nm	-	X	-	-	48.5	-	-	-	-	-

CMZ

MOD: TX52 Y3/Y2 QUATTRO/Y2 TWIN - TX66 Y3/Y2 QUATTRO/Y2 TWIN - TTL 52 - TTL 66
TA15-20-25-30M/Y/MS/MY/YS 15 ST.

MODULO MOTORIZZATO RADIALE
Radial driven tool
Radial angetriebenes Werkzeug

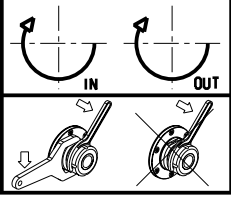

M.T. srl
Via Casino Albini 480
Tel. 0541/956034-957884
Fax 0541/956341
47842 S. GIOVANNI IN M. (RN)
e-mail: mtma@mtmarchetti.com
http://www.mtmarchetti.com

MT®

Subject to change without notice.

CUSCINETTI MAGGIORATI PER LAVORAZIONI PESANTI

Reinforced bearings for heavy machining

Vergroesserte lager fuer schwerere Bearbeitungen

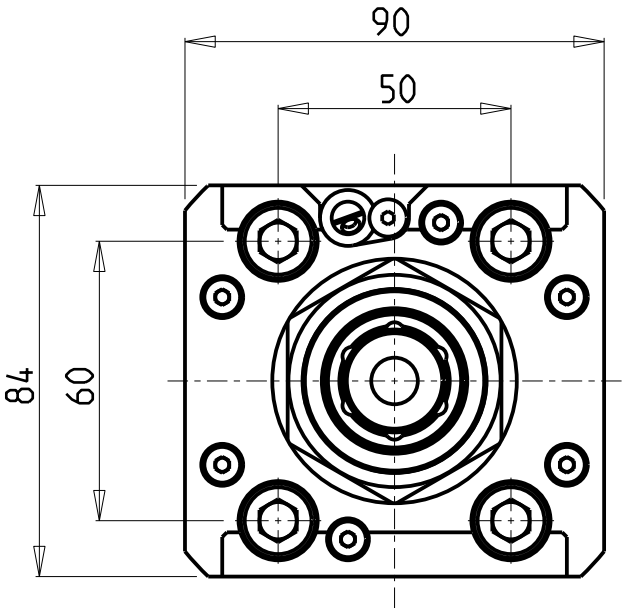

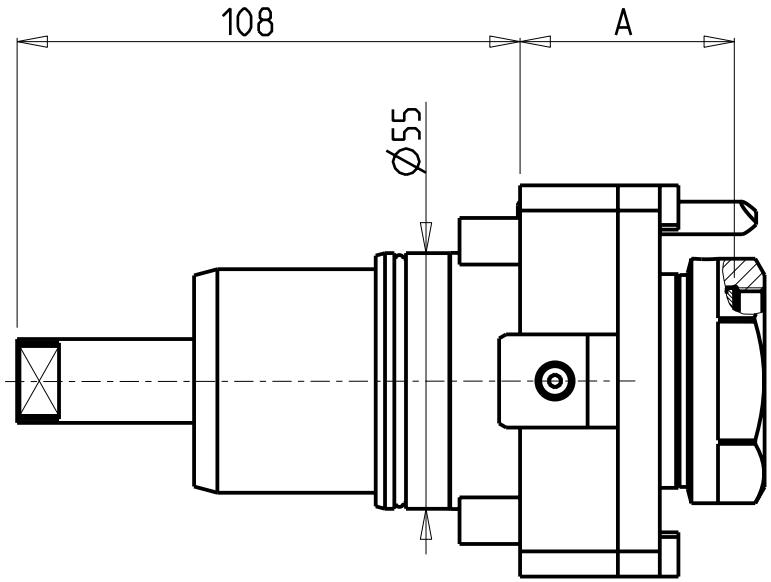

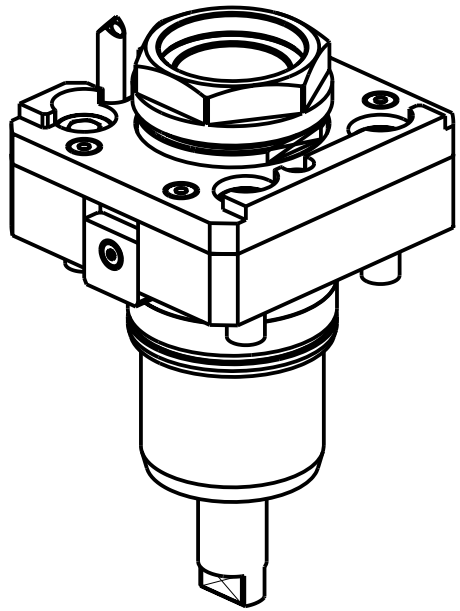

PER PORTAUTENSILI MODULARI MTSK-40 VEDI PAG. TBL300-1-40
FOR MTSK-40 QUIK CHANGE TOOLHOLDERS CLAMPINGS SEE PAGE TBL300-1-40
FUER MTSK-40 MODULARE WERKZEUGAUFNAHMEN SIEHE SEITE TBL300-1-40

Cod. MT	Mandrino Spindle Spindel	I	RPM	Coppia Max Max Torque Max Drehmoment	Lubrificazione int. Coolant through Innenkuhleung	Lubrificazione est. Ext. coolant Aussenkuehlung	A	CHIAVI NON INCLUSE Keys not included Schluessel nicht einbegriffen	
NKM1910140	MTSK-40	1:1	6000	50Nm	-	X	48	CHUB46	OKU0290009 •
NKM1350240	MTSK-40	1:1	6000	50Nm	P=30bar	X	57	CHUB46	OKU0650004 •

• Chiave inclusa

• Key included

• Schluessel inbegriffen

CMZ

MOD: TX52 Y3/Y2 QUATTRO/Y2 TWIN - TX66 Y3/Y2 QUATTRO/Y2 TWIN - TTL 52 - TTL 66
TA15-20-25-30M/Y/MS/MY/YS 15 ST.

MODULO MOTORIZZATO RADIALE MTSK
Radial MTSK driven tool
Radial MTSK angetriebenes Werkzeug

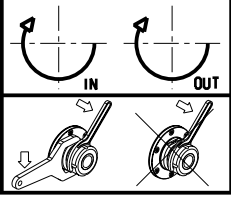

M.T. srl
Via Casino Albini 480
Tel. 0541/956034-957884
Fax 0541/956341
47842 S. GIOVANNI IN M. (RN)
e-mail: mtma@mtmarchetti.com
http://www.mtmarchetti.com

MT®

Subject to change without notice.

04/2022

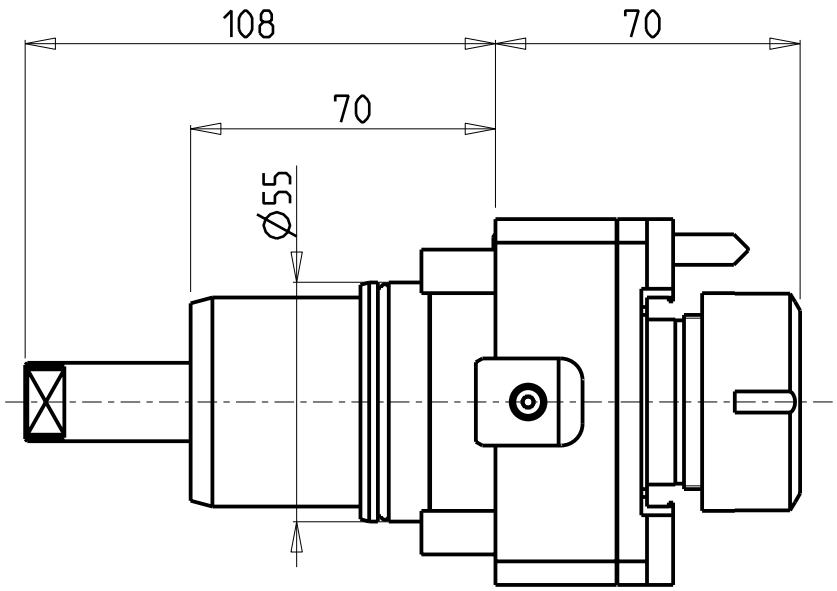

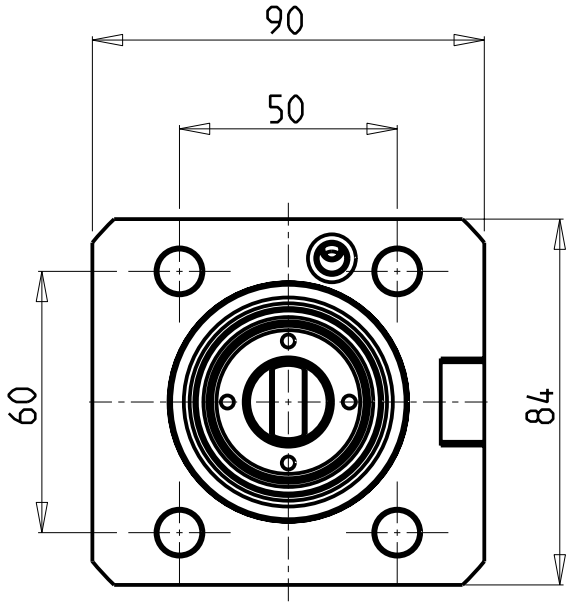

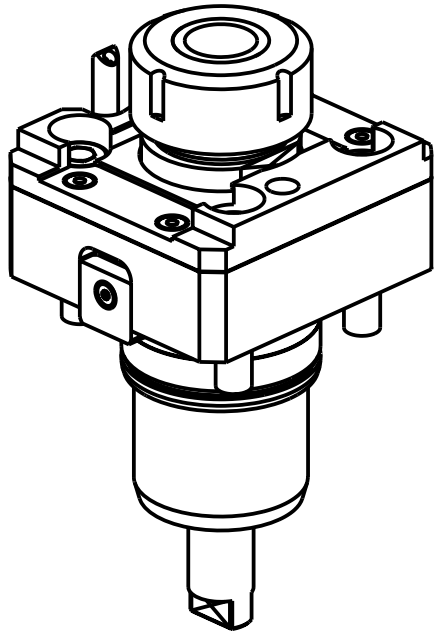

Cod. MT	Mandrino Spindle Spindel	I	RPM	Coppia Max Max Torque Max Drehmoment	Lubrificazione est. Ext. coolant Aussenkuehlung	CHIAVI NON INCLUSE Keys not included Schluessel nicht einbegriffen	
NKM2050132	ER32	1:1	12000	50Nm	X	OKU0290009 •	CHSTER32

• Chiave inclusa
• Key included
• Schluessel inbegriffen

CMZ

MOD: TTL 52 - TTL 66 - TA15-20-25-30M/Y/MS/MY/YS 15 ST.

MODULO MOTORIZZATO RADIALE 12000 RPM
Radial driven tool 12000 rpm
Radial angetriebenes Werkzeug 12000 rpm

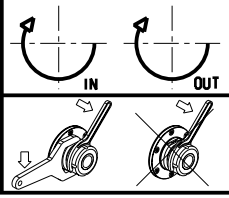

M.T. srl
Via Casino Albini 480
Tel. 0541/956034-957884
Fax 0541/956341
47842 S. GIOVANNI IN M. (RN)
e-mail: mtma@mtmarchetti.com
http://www.mtmarchetti.com

MT®

Subject to change without notice.

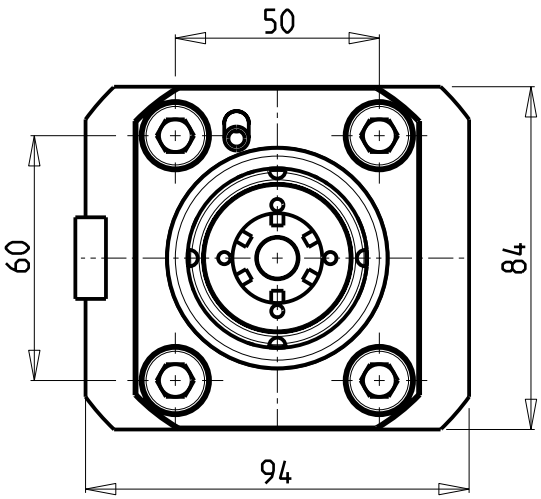

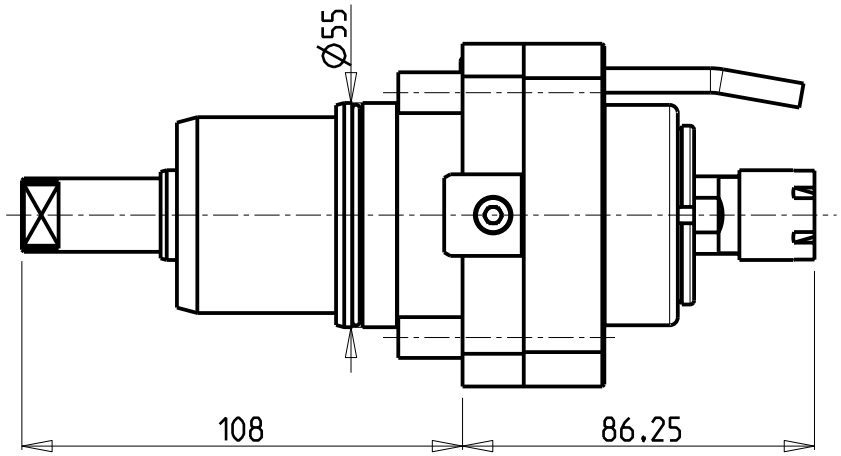

ATTENZIONE - ATTENTION - ACHTUNG

- Per lo smontaggio degli utensili utilizzare sempre la chiave di contrasto come indicato nel manuale d'uso.
- For disassembly of the tools use always the contrast key as mentioned in the user instructions.
- Fuer das Abmontieren der Werkzeuge immer den Gegenschluessel benutzen wie in der Bedienungsanleitung erwaehnt.

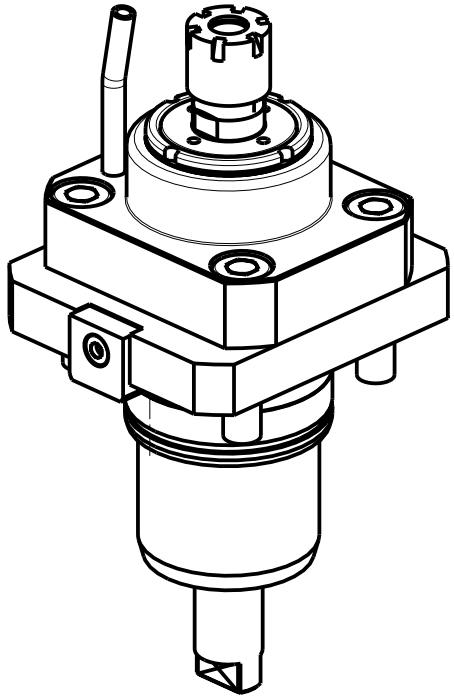

ATTENZIONE - ATTENTION - ACHTUNG

- PRIMA DI UTILIZZARE IL MOTORIZZATO CONSULTARE LE ISTRUZIONI ALLEGATE!
- BEFORE USING THE DRIVEN TOOL, PLEASE CHECK THE ENCLOSED INSTRUCTION SHEET!
- VOR DER BENUTZUNG DES ANGETRIEBENEN WERKZEUGES, DIE BEILIEGENDEN INSTRUKTIONEN DURCHLESEN!

Cod. MT	Mandrino Spindle Spindel	I	RPM	Coppia Max Max Torque Max Drehmoment	Lubrificazione est. Ext. coolant Aussenkuehlung	CHIAVI INCLUSE Keys included Schluessel einbegriffen	
NKM0040016	ER16	1:3	18000	10Nm	X	CHUB17	CHMNER16

CMZ

MOD: TX52 Y3/Y2 QUATTRO/Y2 TWIN - TX66 Y3/Y2 QUATTRO/Y2 TWIN - TTL 52 - TTL 66
TA15-20-25-30M/Y/MS/MY/YS 15 ST.

MODULO MOTORIZZATO RADIALE MOLTIPLICATO I=1:3
Radial geared-up I=1:3 driven tool
Radial angetriebenes Werkzeug uebersetzt I=1:3

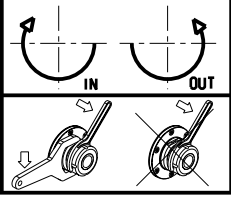

M.T. srl
Via Casino Albini 480
Tel. 0541/956034-957884
Fax 0541/956341
47842 S. GIOVANNI IN M. (RN)
e-mail: mtma@mtmarchetti.com
http://www.mtmarchetti.com

MT®

Subject to change without notice.

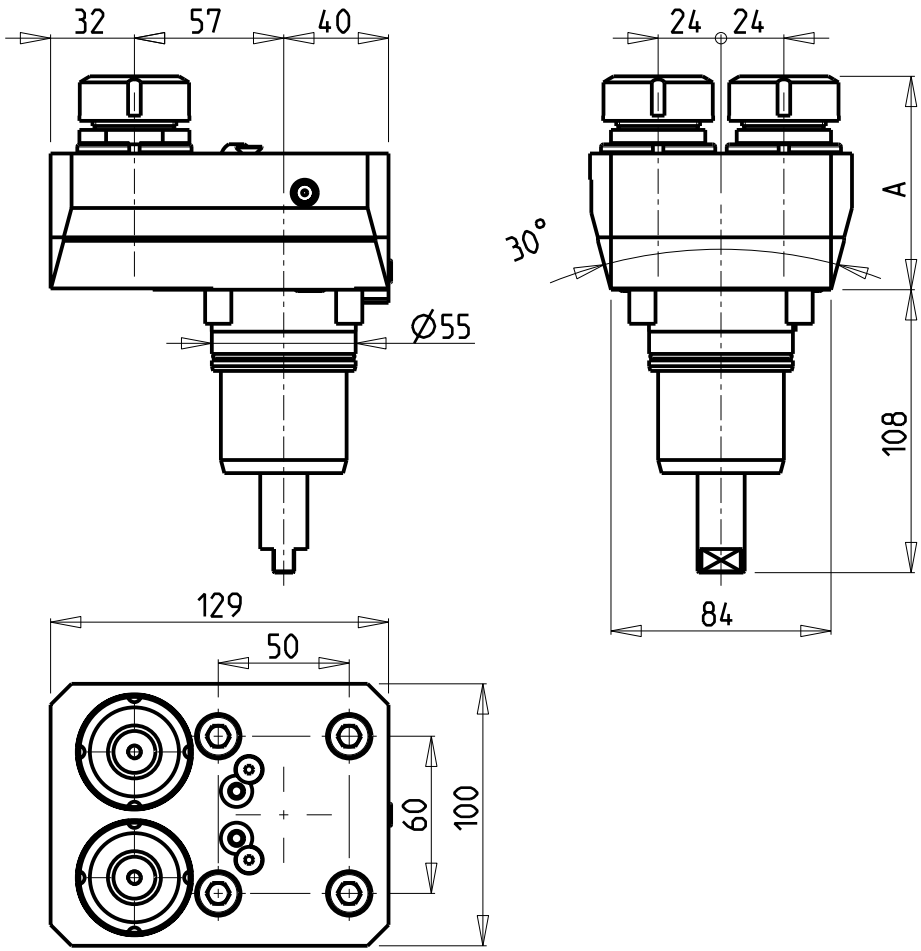

ATTENZIONE - ATTENTION - ACHTUNG

- VERIFICARE LE MISURE DI INGOMBRO PER POSSIBILE INTERFERENZA SU ALCUNI MODELLI DI MACCHINE
- Please check the overall sizes for possible interferences on some machine models
- Bitte überprüfen sie das ausmass um mögliche interferenzen auf einigen maschinen modellen zu vermeiden

ATTENZIONE - ATTENTION - ACHTUNG

- Per lo smontaggio degli utensili utilizzare sempre la chiave di contrasto come indicato nel manuale d'uso.
- For disassembly of the tools use always the contrast key as mentioned in the user instructions.
- Fuer das Abmontieren der Werkzeuge immer den Gegenschluessel benutzen wie in der Bedienungsanleitung erwaehnt.

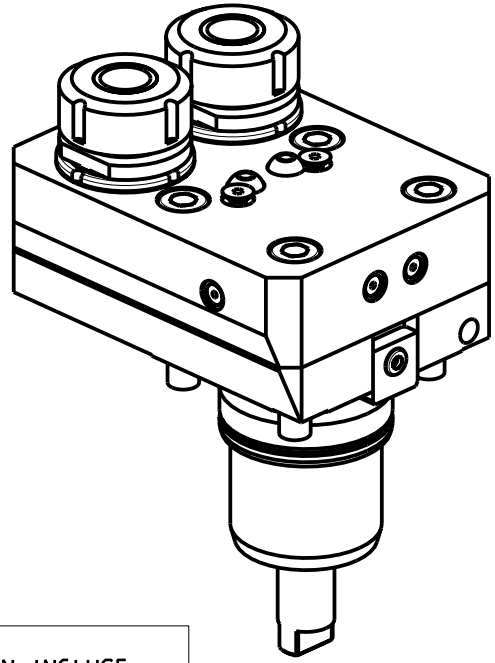

Cod. MT	Mandrino Spindle Spindel	I	RPM	Coppia Max Max Torque Max Drehmoment	Lubrificazione int. Coolant through Innenkuehlung	Lubrificazione est. Ext. coolant Aussenkuehlung	Reversibile lato mandrino/contromandrino Reversible sub/main spindle side Umkehrbare Spindelseite/ Gegenspindelseite	A	CHIAVI NON INCLUSE Keys not included Schluessel nicht inbegriffen	
NKM0320225	ER25	1:1	6000	30Nm	-	X	X	81.46	CHUB36	CHSTER25
NKM0321225	ER25	1:1	6000	30Nm	P=70bar	X	X	94.46	CHUB36	CHSTER25

CMZ

MOD: TX52 Y3/Y2 QUATTRO/Y2 TWIN - TX66 Y3/Y2 QUATTRO/Y2 TWIN - TTL 52 - TTL 66
TA15-20-25-30M/Y/MS/MY/YS 15 ST.

MODULO MOTORIZZATO RADIALE 2 USCITE IN Y
Radial single side twin head driven tool in Y
Radial angetriebenes Werkzeug 2 Ausgaenge in Y

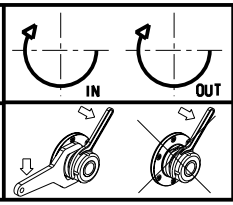

M.T. srl
Via Casino Albini 480
Tel. 0541/956034-957884
Fax 0541/956341
47842 S. GIOVANNI IN M. (RN)
e-mail: mtma@mtmarchetti.com
http://www.mtmarchetti.com

MT®

Subject to change without notice.

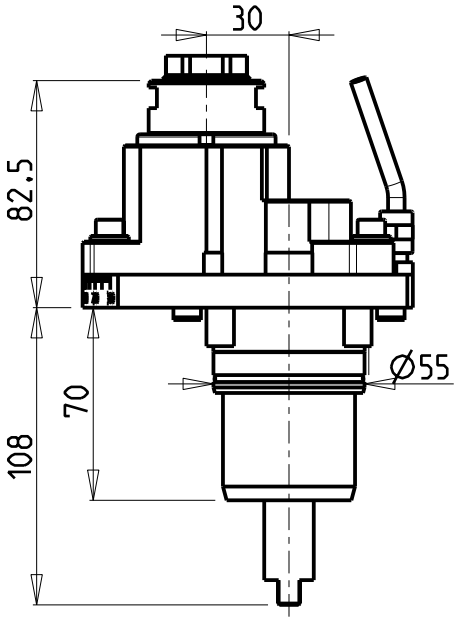

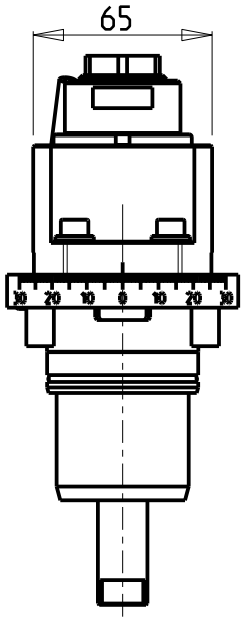

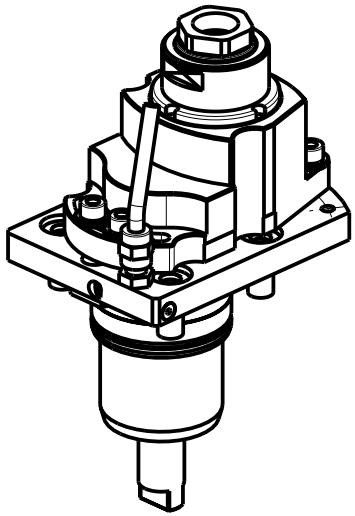

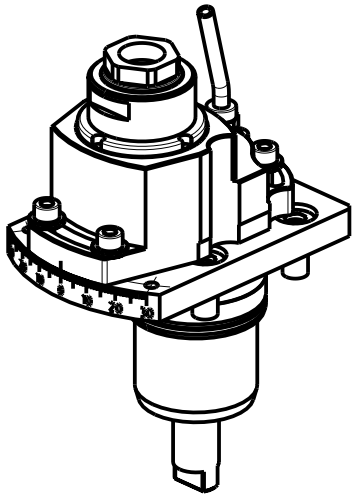

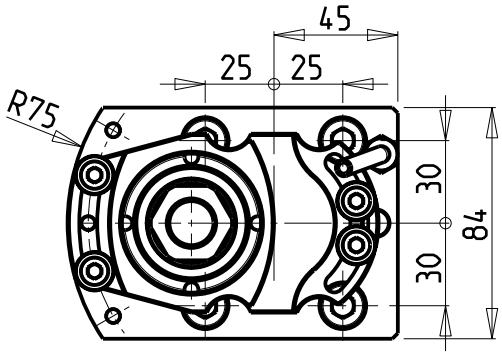

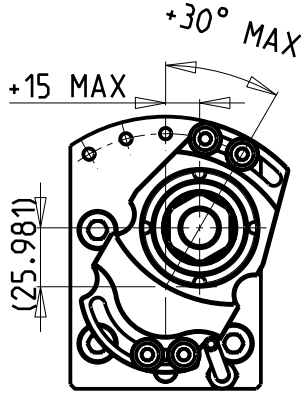

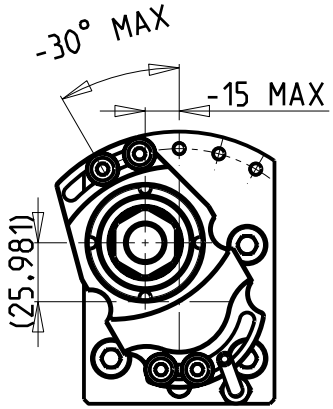

ATTENZIONE - ATTENTION - ACHTUNG

- Per lo smontaggio degli utensili utilizzare sempre la chiave di contrasto come indicato nel manuale d'uso.
- For disassembly of the tools use always the contrast key as mentioned in the user instructions.
- Fuer das Abmontieren der Werkzeuge immer den Gegenschluessel benutzen wie in der Bedienungsanleitung erwaehnt.

Cod. MT	Mandrino Spindle Spindel	I	RPM	Coppia Max Max Torque Max Drehmoment	Lubrificazione est. Ext. coolant Aussenkuehlung	CHIAVI NON INCLUSE Keys not included Schluessel nicht einbegriffen	
NKM0621025	ERA25	1:1	6000	30Nm	X	CHUB36	CHUB27

CMZ

MOD: TX52 Y3/Y2 QUATTRO/Y2 TWIN - TX66 Y3/Y2 QUATTRO/Y2 TWIN - TTL 52 - TTL 66
TA15-20-25-30M/Y/MS/MY/YS 15 ST.

MODULO MOTORIZZATO RADIALE DISASSATO 30mm ORIENTABILE ±30°
Radial ±30°adjustable angle driven tool re-directed by 30mm
Radial angetriebenes Werkzeug schwenkbar ±30° achsversetzt um 30mm

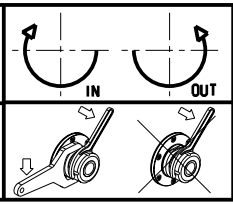

M.T. srl
Via Casino Albini 480
Tel. 0541/956034-957884
Fax 0541/956341
47842 S. GIOVANNI IN M. (RN)
e-mail: mtma@mtmarchetti.com
http://www.mtmarchetti.com

MT®

PAGINA CMZ135-3-00

Subject to change without notice.

04/2022

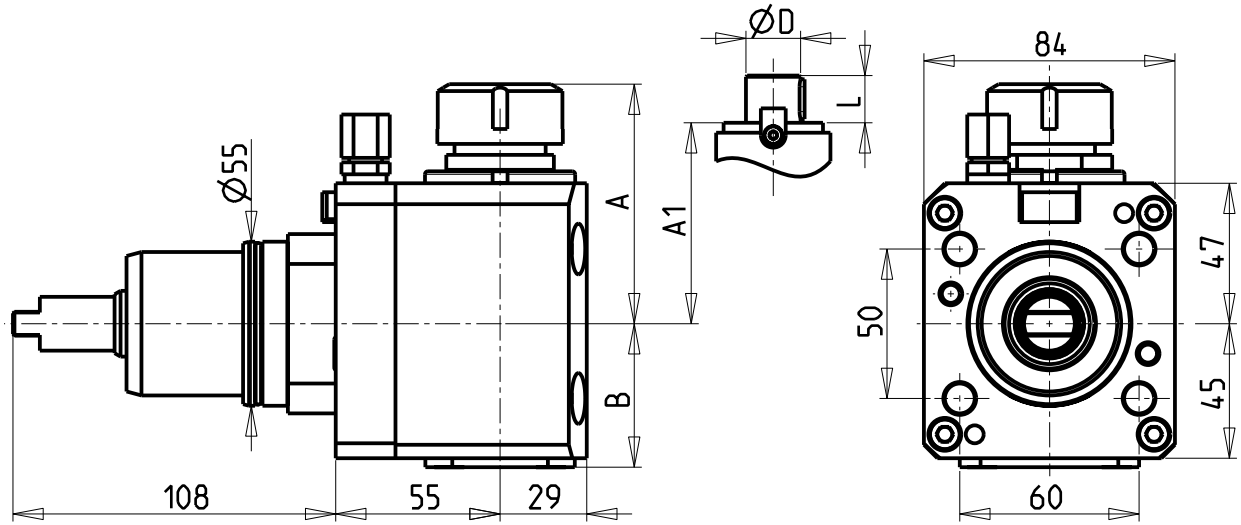

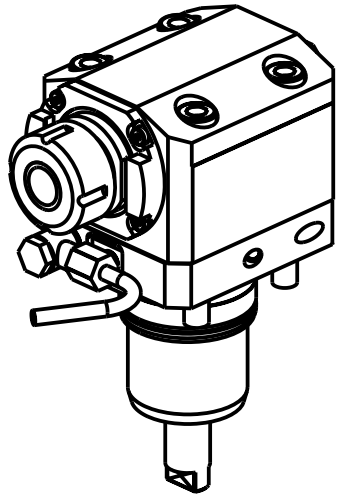

ATTENZIONE - ATTENTION - ACHTUNG

- Per lo smontaggio degli utensili utilizzare sempre la chiave di contrasto come indicato nel manuale d'uso.
- For disassembly of the tools use always the contrast key as mentioned in the user instructions.
- Fuer das Abmontieren der Werkzeuge immer den Gegenschluessel benutzen wie in der Bedienungsanleitung erwaehnt.

• Chiave inclusa
• Key included
• Schluessel inbegriffen

Cod. MT	Mandrino Spindle Spindel	I	RPM	Coppia Max Max Torque Max Drehmoment	Reversibile lato mandrino/contromandrino Reversible sub/main spindle side Umkehrbare Spindelseite/ Gegenspindelseite	Lubr. interna Coolant through Innenkuhlung	Lubr. esterna Ext. coolant Aussenkuhlung	A	A1	B	D	L	CHIAVI NON INCLUSE Keys not included Schluessel nicht einbegriffen	
NKM0021620	ER20	1:1	6000	50Nm	X	-	X	80.66	-	48	-	-	OKU0290009 •	CHSTER20
NKM0021820	ER20	1:1	6000	50Nm	X	P=70bar	X	80.66	-	59	-	-	OKU0290009 •	CHSTER20
NKM0021420	ERA20	1:1	6000	50Nm	X	-	X	69.23	-	48	-	-	OKU0290009 •	CHUB22
NKM0021520	ERA20	1:1	6000	50Nm	X	P=70bar	X	69.23	-	59	-	-	OKU0290009 •	CHUB22
NKM0021425	ER25	1:1	6000	50Nm	X	-	X	82.16	-	48	-	-	OKU0290009 •	CHSTER25
NKM0021625	ER25	1:1	6000	50Nm	X	P=70bar	X	82.16	-	59	-	-	OKU0290009 •	CHSTER25
NKM0022432	ER32	1:1	6000	50Nm	X	-	X	92.16	-	48	-	-	OKU0290009 •	CHSTER32
NKM0022532	ER32	1:1	6000	50Nm	X	P=70bar	X	92.16	-	59	-	-	OKU0290009 •	CHSTER32
NKM0021617	Ø16x17	1:1	6000	50Nm	X	-	X	-	63	48	16	17	CHUB36	CH_VTCROCE_M08 •
NKM0022219	Ø22x19	1:1	6000	50Nm	X	-	X	-	63	48	22	19	CHUB36	CH_VTCROCE_M10 •
NKM0022721	Ø27x21	1:1	6000	50Nm	X	-	X	-	65.5	48	27	21	CHUB36	CH_VTCROCE_M12 •
NKM0022737	Ø27x37	1:1	6000	50Nm	X	-	X	-	65.5	48	27	37	CHUB36	CH_VTCROCE_M12 •

CMZ

MOD: TX52 Y3/Y2 QUATTRO/Y2 TWIN - TX66 Y3/Y2 QUATTRO/Y2 TWIN - TTL 52 - TTL 66
TA15-20-25-30M/Y/MS/MY/YS 15 ST.

MODULO MOTORIZZATO ASSIALE H=55mm
Axial driven tool H=55mm
Axial angetriebenes Werkzeug H=55mm

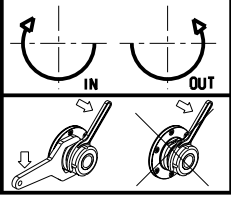

M.T. srl
Via Casino Albini 480
Tel. 0541/956034-957884
Fax 0541/956341
47842 S. GIOVANNI IN M. (RN)
e-mail: mtma@mtmarchetti.com
http://www.mtmarchetti.com

Subject to change without notice.

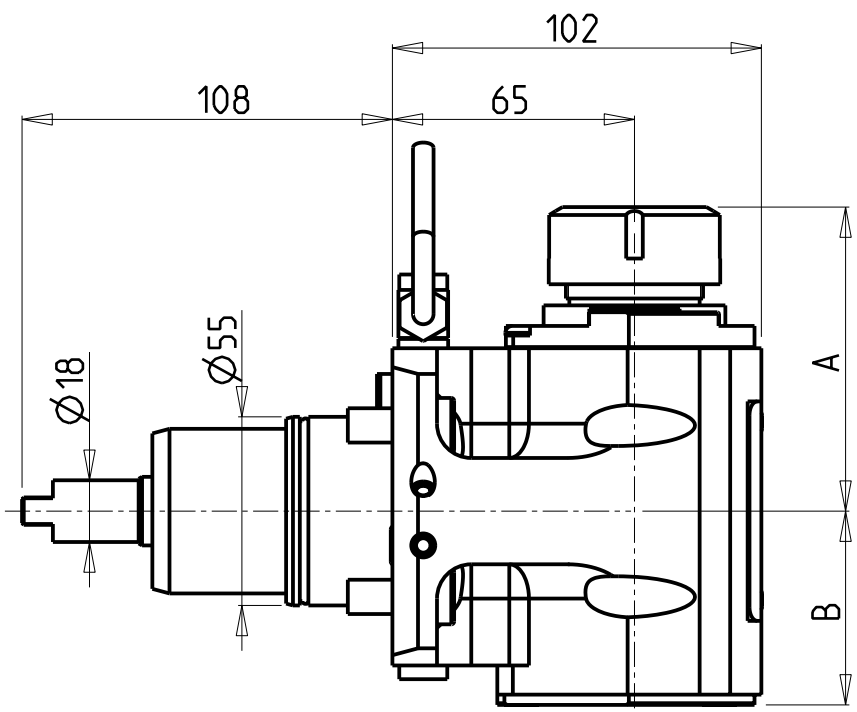

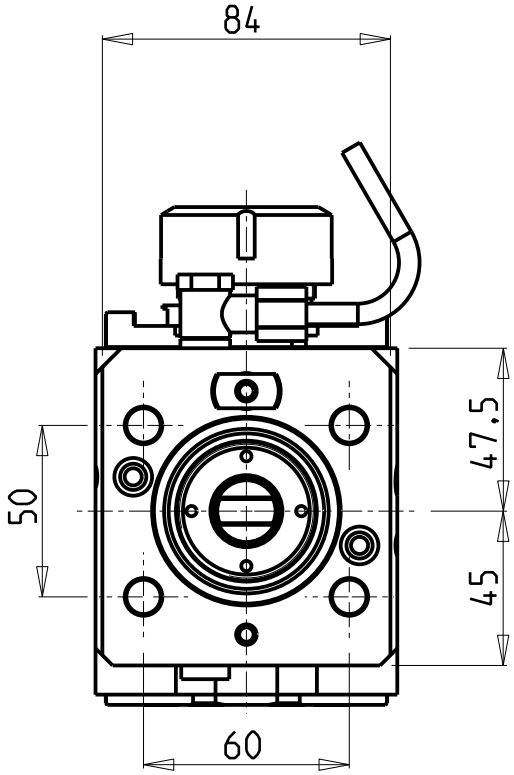

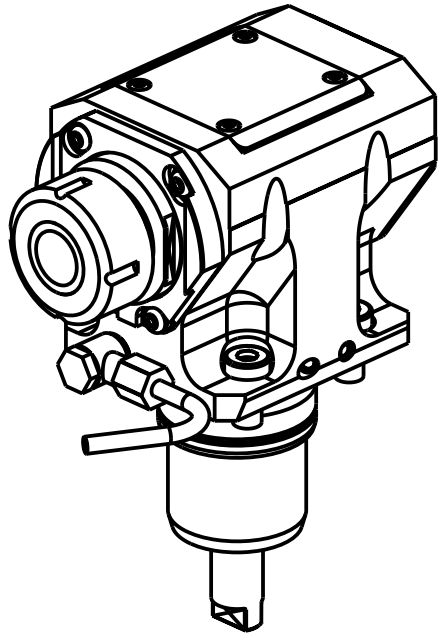

Cod. MT	Mandrino Spindle Spindel	I	RPM	Coppia Max Max Torque Max Drehmoment	Reversibile lato mandrino/contromandrino Reversible sub/main spindle side Umkehrbare Spindelseite/ Gegenspindelseite	Lubr.interna Coolant through Innenkuehlung	Lubr. esterna Ext. coolant Aussenkuehlung	A	B	CHIAVI NON INCLUSE Keys not included Schluessel nicht einbegriffen	
NKM2080132	ER32	1:1	6000	50Nm	X	-	X	88.7	56.5	CHSTER32	OKU0650004 •
NKM2080140	ER40	1:1	6000	50Nm	X	-	X	99.2	56.5	CHSTER40	OKU0650004 •
NKM2080232	ER32	1:1	6000	50Nm	X	P=70bar	X	88.7	67.5	CHSTER32	OKU0650004 •
NKM2080240	ER40	1:1	6000	50Nm	X	P=70bar	X	99.2	67.5	CHSTER40	OKU0650004 •

• Chiave inclusa
• Key included
• Schluessel inbegriffen

CMZ

MOD: TX52 Y3/Y2 QUATTRO/Y2 TWIN - TX66 Y3/Y2 QUATTRO/Y2 TWIN - TTL 52 - TTL 66
TA15-20-25-30M/Y/MS/MY/YS 15 ST.

MODULO MOTORIZZATO ASSIALE H=65mm
Axial driven tool H=65mm
Axial angetriebenes Werkzeug H=65mm

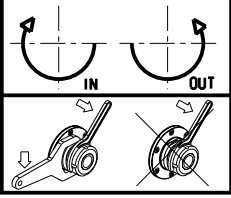

M.T. srl
Via Casino Albini 480
Tel. 0541/956034-957884
Fax 0541/956341
47842 S. GIOVANNI IN M. (RN)
e-mail: mtma@mtmarchetti.com
http://www.mtmarchetti.com

Subject to change without notice.

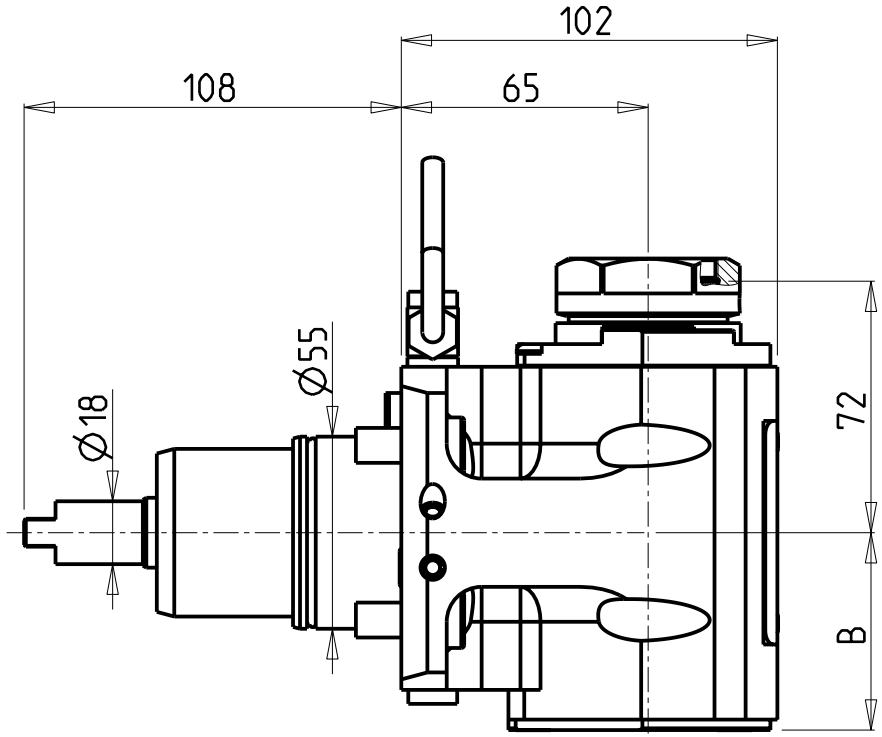

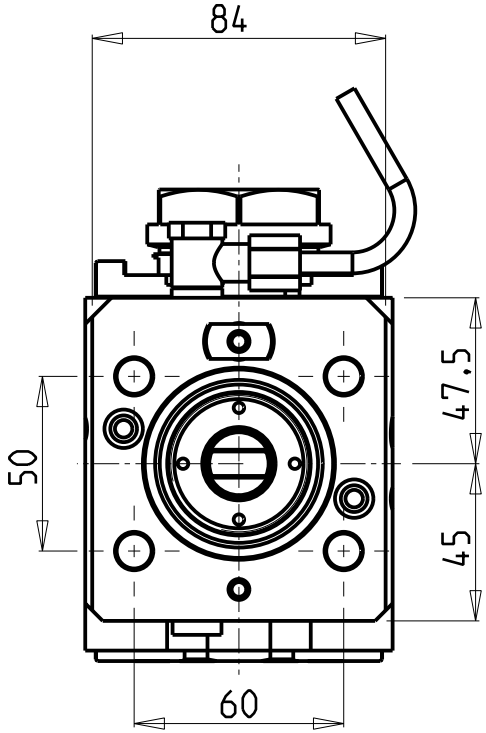

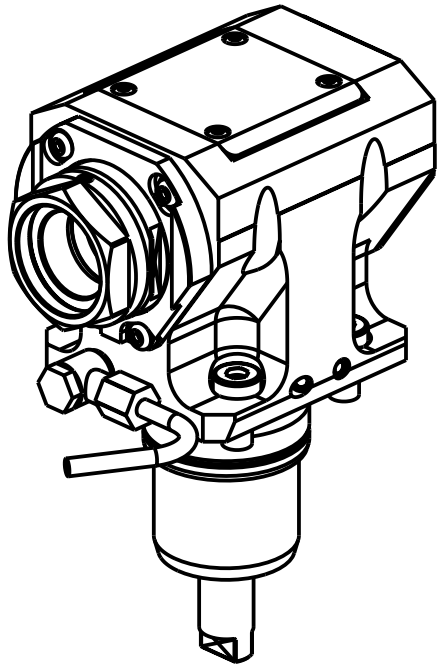

PER PORTAUTENSILI MODULARI MTSK-40 VEDI PAG. TBL300-1-40
FOR MTSK-40 QUIK CHANGE TOOLHOLDERS CLAMPINGS SEE PAGE TBL300-1-40
FUER MTSK-40 MODULARE WERKZEUGAUFNAHMEN SIEHE SEITE TBL300-1-40

Cod. MT	Mandrino Spindle Spindel	I	RPM	Coppia Max Max Torque Max Drehmoment	Reversibile lato mandrino/contromandrino Reversible sub/main spindle side Umkehrbare Spindelseite/ Gegenspindelseite	Lubrificazione int. Coolant through Innenkuehlung	Lubrificazione est. Ext. coolant Aussenkuehlung	B	CHIAVI NON INCLUSE Keys not included Schluessel nicht einbegriffen	
NKM2090140	MTSK-40	1:1	6000	50Nm	X	-	X	56.5	CHUB46	OKU0650004 •
NKM2090240	MTSK-40	1:1	6000	50Nm	X	P=70bar	X	67.5	CHUB46	OKU0650004 •

• Chiave inclusa
• Key included
• Schluessel inbegriffen

CMZ
MOD: TX52 Y3/Y2 QUATTRO/Y2 TWIN - TX66 Y3/Y2 QUATTRO/Y2 TWIN - TTL 52 - TTL 66
TA15-20-25-30M/Y/MS/MY/YS 15 ST.

MODULO MOTORIZZATO ASSIALE MTSK H=65mm
Axial MTSK driven tool H=65mm
Axial MTSK angetriebenes Werkzeug H=65mm

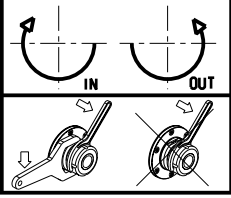

M.T. srl
Via Casino Albini 480
Tel. 0541/956034-957884
Fax 0541/956341
47842 S. GIOVANNI IN M. (RN)
e-mail: mtma@mtmarchetti.com
http://www.mtmarchetti.com

MT®

PAGINA CMZ150-3-15-K

Subject to change without notice.

04/2022

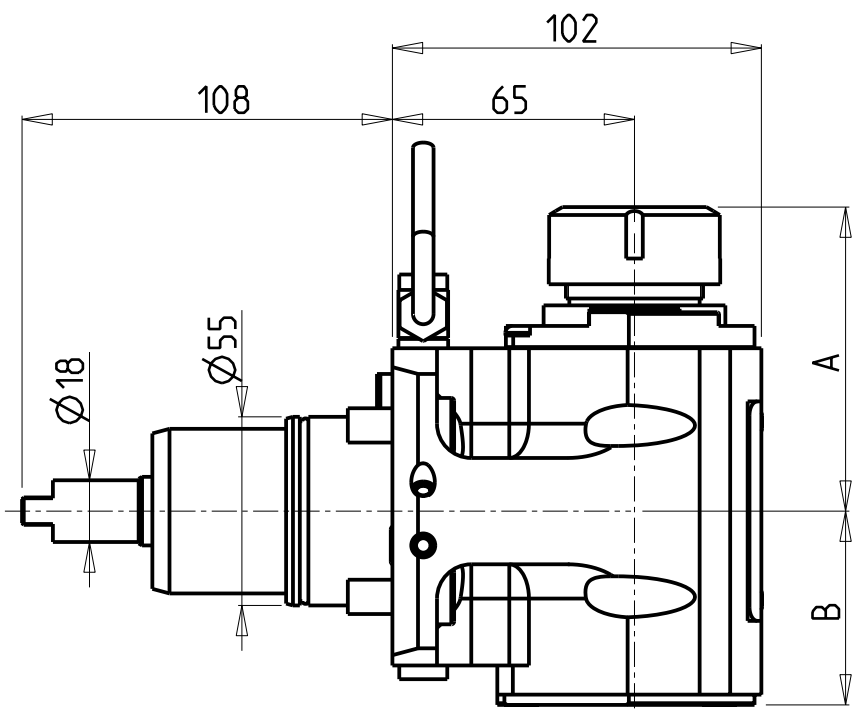

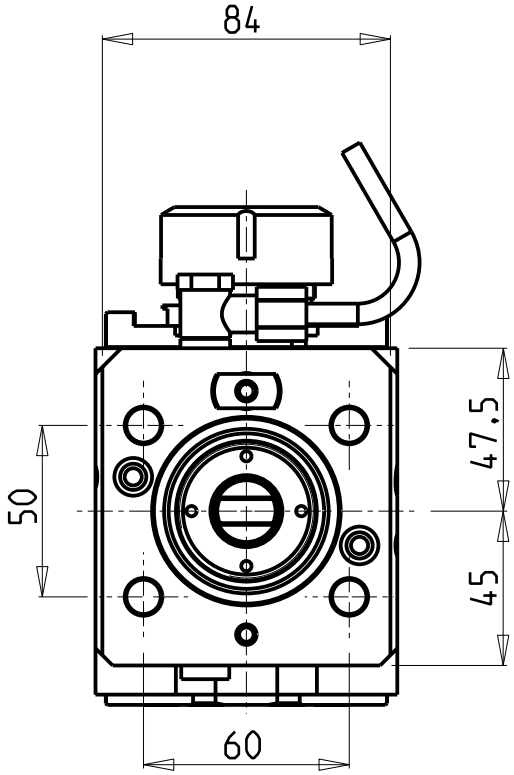

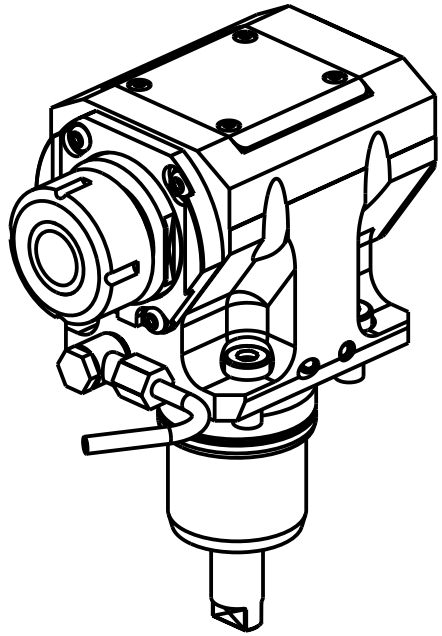

Cod. MT	Mandrino Spindle Spindel	I	RPM	Coppia Max Max Torque Max Drehmoment	Reversibile lato mandrino/contromandrino Reversible sub/main spindle side Umkehrbare Spindelseite/ Gegenspindelseite	Lubr.interna Coolant through Innenkuehlung	Lubr. esterna Ext. coolant Aussenkuehlung	A	B	CHIAVI NON INCLUSE Keys not included Schluessel nicht einbegriffen	
NKM1300132	ER32	1:1	12000	50Nm	X	-	X	88.7	56.5	CHSTER32	OKU0650004 •
NKM1300140	ER40	1:1	12000	50Nm	X	-	X	99.2	56.5	CHSTER40	OKU0650004 •
NKM1300232	ER32	1:1	12000	50Nm	X	P=70bar	X	88.7	67.5	CHSTER32	OKU0650004 •
NKM1300240	ER40	1:1	12000	50Nm	X	P=70bar	X	99.2	67.5	CHSTER40	OKU0650004 •

• Chiave inclusa
• Key included
• Schluessel inbegriffen

CMZ

MOD: TTL 52 - TTL 66 - TA15-20-25-30M/Y/MS/MY/YS 15 ST.

MODULO MOTORIZZATO ASSIALE 12000 RPM H=65mm
Axial driven tool 12000 rpm H=65mm
Axial angetriebenes Werkzeug 12000 rpm H=65mm

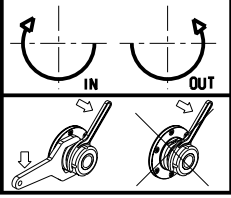

M.T. srl
Via Casino Albini 480
Tel. 0541/956034-957884
Fax 0541/956341
47842 S. GIOVANNI IN M. (RN)
e-mail: mtma@mtmarchetti.com
http://www.mtmarchetti.com

Subject to change without notice.

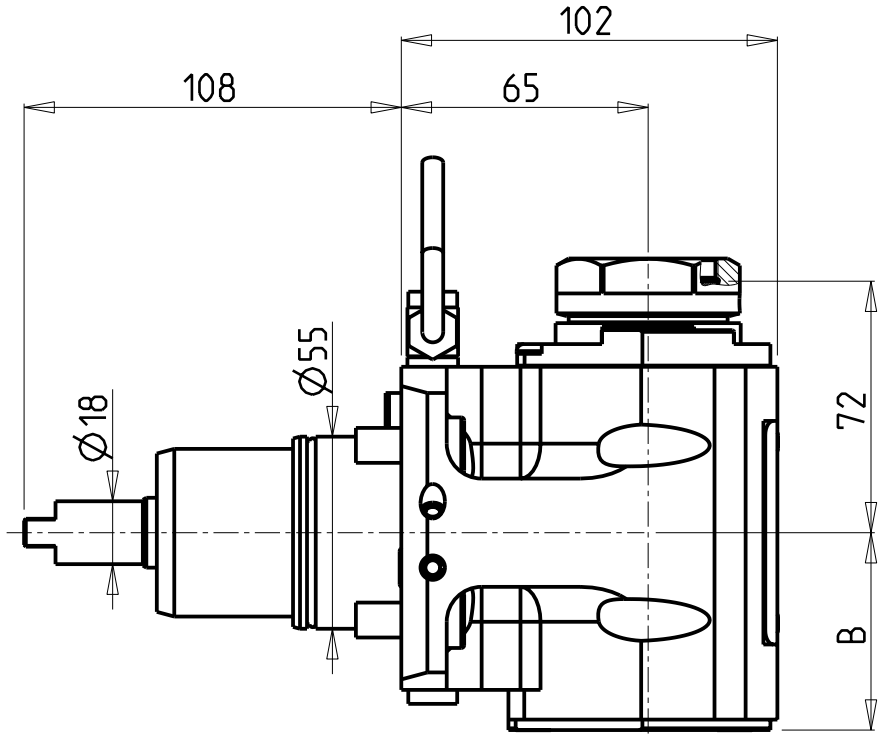

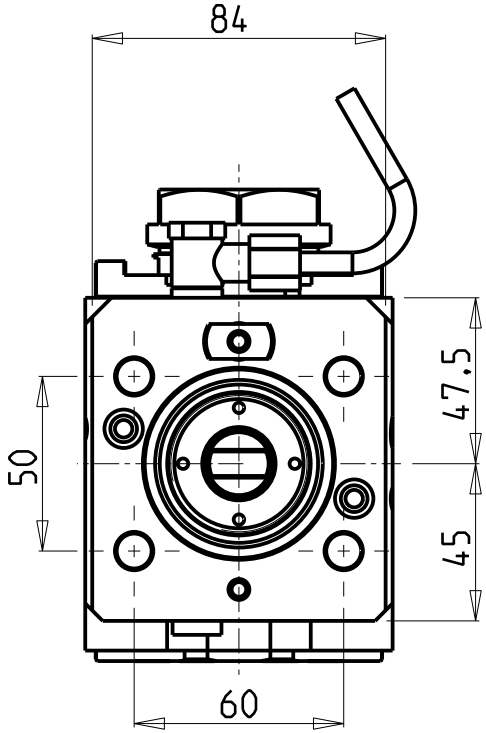

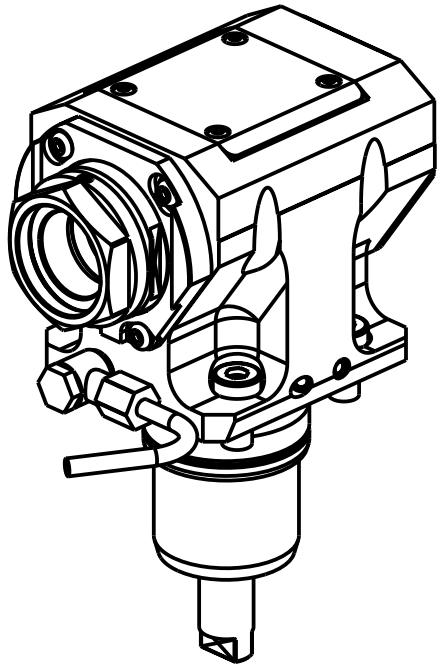

PER PORTAUTENSILI MODULARI MTSK-40 VEDI PAG. TBL300-1-40
FOR MTSK-40 QUIK CHANGE TOOLHOLDERS CLAMPINGS SEE PAGE TBL300-1-40
FUER MTSK-40 MODULARE WERKZEUGAUFNAHMEN SIEHE SEITE TBL300-1-40

Cod. MT	Mandrino Spindle Spindel	I	RPM	Coppia Max Max Torque Max Drehmoment	Reversibile lato mandrino/contromandrino Reversible sub/main spindle side Umkehrbare Spindelseite/ Gegenspindelseite	Lubrificazione int. Coolant through Innenkuehlung	Lubrificazione est. Ext. coolant Aussenkuehlung	B	CHIAVI NON INCLUSE Keys not included Schluessel nicht einbegriffen	
NKM2060140	MTSK-40	1:1	12000	50Nm	X	-	X	56.5	CHUB46	OKU0650004 •
NKM2060240	MTSK-40	1:1	12000	50Nm	X	P=70bar	X	67.5	CHUB46	OKU0650004 •

• Chiave inclusa
• Key included
• Schluessel inbegriffen

CMZ

MOD: TTL 52 - TTL 66 - TA15-20-25-30M/Y/MS/MY/YS 15 ST.

MODULO MOTORIZZATO ASSIALE MTSK 12000 RPM H=65mm
Axial MTSK driven tool 12000 rpm H=65mm
Axial MTSK angetriebenes Werkzeug 12000 rpm H=65mm

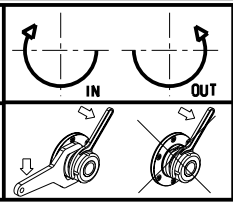

M.T. srl
Via Casino Albini 480
Tel. 0541/956034-957884
Fax 0541/956341
47842 S. GIOVANNI IN M. (RN)
e-mail: mtma@mtmarchetti.com
http://www.mtmarchetti.com

MT®

Subject to change without notice.

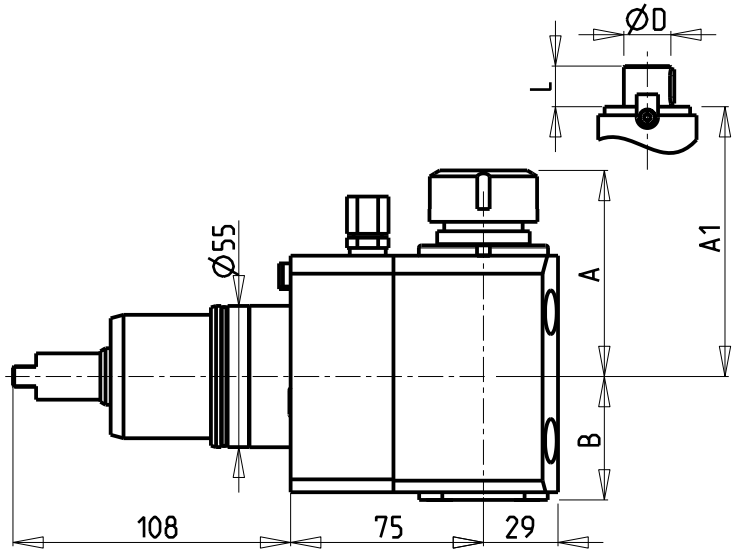

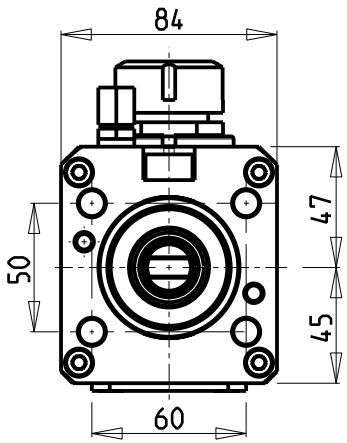

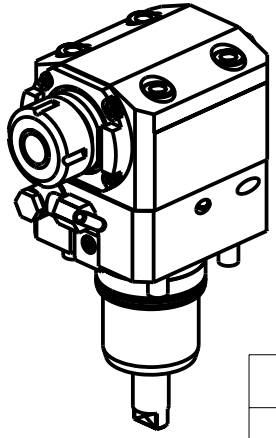

- Chiave inclusa
- Key included
- Schluessel inbegriffen

ATTENZIONE - ATTENTION - ACHTUNG

- Per lo smontaggio degli utensili utilizzare sempre la chiave di contrasto come indicato nel manuale d'uso.
- For disassembly of the tools use always the contrast key as mentioned in the user instructions.
- Fuer das Abmontieren der Werkzeuge immer den Gegenschluessel benutzen wie in der Bedienungsanleitung erwaehnt.

ATTENZIONE - ATTENTION - ACHTUNG

- VERIFICARE LE MISURE DI INGOMBRO PER POSSIBILE INTERFERENZA SU ALCUNI MODELLI DI MACCHINE
- Please check the overall sizes for possible interferences on some machine models
- Bitte überprüfen sie das ausmass um mögliche interferenzen auf einigen maschinen modellen zu vermeiden

Cod. MT	Mandrino Spindle Spindel	I	RPM	Coppia Max Max Torque Max Drehmoment	Reversibile lato mandrino/contromandrino Reversible sub/main spindle side Umkehrbare Spindelseite/ Gegenspindelseite	Lubr.interna Coolant through Innenkuehlung	Lubr. esterna Ext. coolant Aussenkuehlung	A	A1	B	D	L	CHIAVI NON INCLUSE Keys not included Schluessel nicht einbegriffen	
NKM0061620	ER20	1:1	6000	50Nm	X	-	X	80.66	-	48	-	-	OKU0290009 •	CHSTER20
NKM0061820	ER20	1:1	6000	50Nm	X	P=70bar	X	80.66	-	59	-	-	OKU0290009 •	CHSTER20
NKM0061420	ERA20	1:1	6000	50Nm	X	-	X	69.23	-	48	-	-	OKU0290009 •	CHUB22
NKM0061520	ERA20	1:1	6000	50Nm	X	P=70bar	X	69.23	-	59	-	-	OKU0290009 •	CHUB22
NKM0061425	ER25	1:1	6000	50Nm	X	-	X	82.16	-	48	-	-	OKU0290009 •	CHSTER25
NKM0061625	ER25	1:1	6000	50Nm	X	P=70bar	X	82.16	-	59	-	-	OKU0290009 •	CHSTER25
NKM0062432	ER32	1:1	6000	50Nm	X	-	X	92.16	-	48	-	-	OKU0290009 •	CHSTER32
NKM0062532	ER32	1:1	6000	50Nm	X	P=70bar	X	92.16	-	59	-	-	OKU0290009 •	CHSTER32
NKM0061617	Ø16x17	1:1	6000	50Nm	X	-	X	-	63	48	16	17	CHUB36	CH_VTCROCE_M08 •
NKM0062219	Ø22x19	1:1	6000	50Nm	X	-	X	-	63	48	22	19	CHUB36	CH_VTCROCE_M10 •
NKM0062721	Ø27x21	1:1	6000	50Nm	X	-	X	-	65.5	48	27	21	CHUB36	CH_VTCROCE_M12 •

CMZ

MOD: TX52 Y3/Y2 QUATTRO/Y2 TWIN - TX66 Y3/Y2 QUATTRO/Y2 TWIN - TTL 52 - TTL 66
TA15-20-25-30M/Y/MS/MY/YS 15 ST.

MODULO MOTORIZZATO ASSIALE H=75mm
Axial driven tool H=75mm
Axial angetriebenes Werkzeug H=75mm

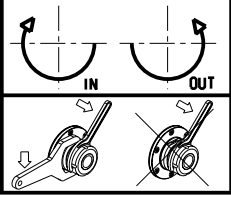

M.T. srl
Via Casino Albini 480
Tel. 0541/956034-957884
Fax 0541/956341
47842 S. GIOVANNI IN M. (RN)
e-mail: mtma@mtmarchetti.com
http://www.mtmarchetti.com

Subject to change without notice.

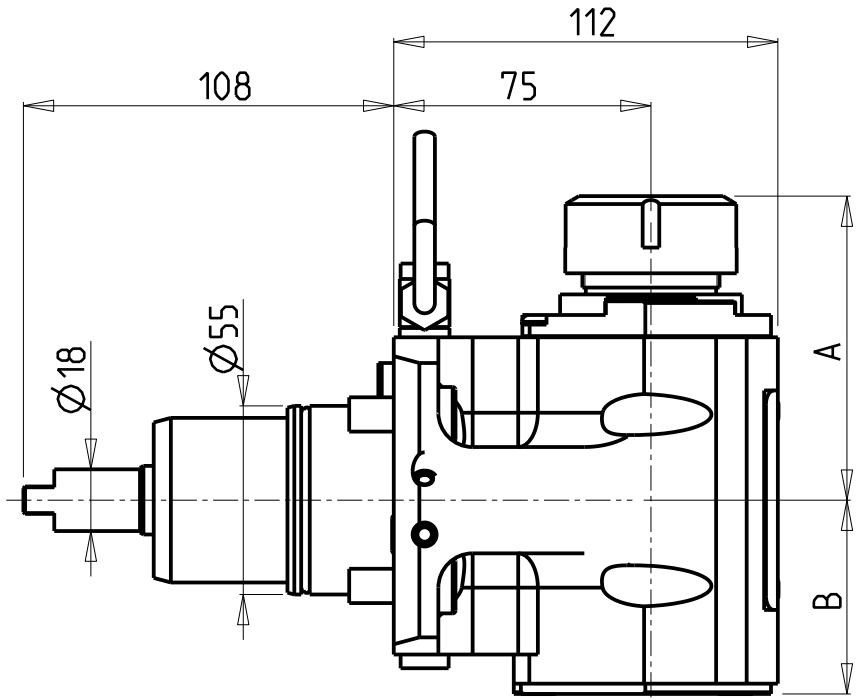

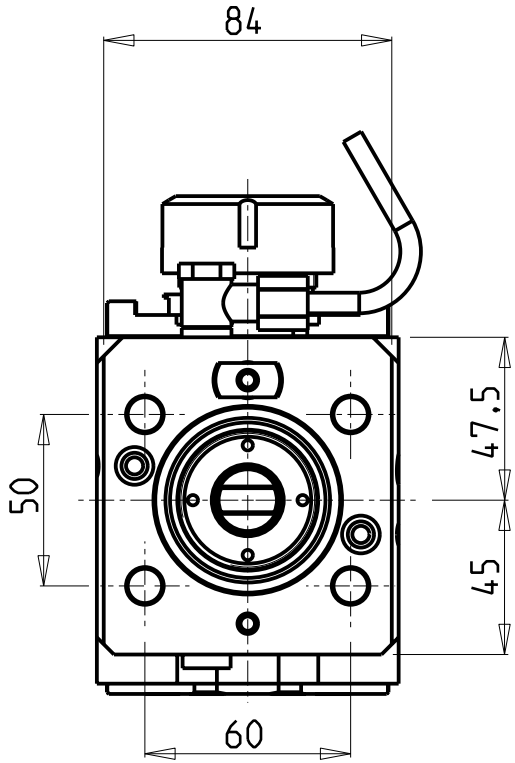

ATTENZIONE - ATTENTION - ACHTUNG

- VERIFICARE LE MISURE DI INGOMBRO PER POSSIBILE INTERFERENZA SU ALCUNI MODELLI DI MACCHINE
- Please check the overall sizes for possible interferences on some machine models
- Bitte überprüfen sie das ausmass um mögliche interferenzen auf einigen maschinen modellen zu vermeiden

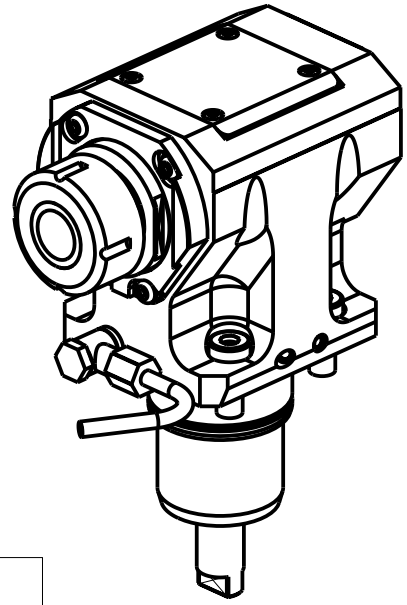

Cod. MT	Mandrino Spindle Spindel	I	RPM	Coppia Max Max Torque Max Drehmoment	Reversibile lato mandrino/contromandrino Reversible sub/main spindle side Umkehrbare Spindelseite/ Gegenspindelseite	Lubr.interna Coolant through Innenkuehlung	Lubr. esterna Ext. coolant Aussenkuehlung	A	B	CHIAVI NON INCLUSE Keys not included Schluessel nicht einbegriffen	
NKM1390132	ER32	1:1	6000	50Nm	X	-	X	88.7	56.5	CHSTER32	OKU0650004 •
NKM1390140	ER40	1:1	6000	50Nm	X	-	X	99.2	56.5	CHSTER40	OKU0650004 •
NKM1390232	ER32	1:1	6000	50Nm	X	P=70bar	X	88.7	67.5	CHSTER32	OKU0650004 •
NKM1390240	ER40	1:1	6000	50Nm	X	P=70bar	X	99.2	67.5	CHSTER40	OKU0650004 •

- Chiave inclusa
- Key included
- Schluessel inbegriffen

CMZ

MOD: TX52 Y3/Y2 QUATTRO/Y2 TWIN - TX66 Y3/Y2 QUATTRO/Y2 TWIN - TTL 52 - TTL 66
TA15-20-25-30M/Y/MS/MY/YS 15 ST.

MODULO MOTORIZZATO ASSIALE H=75mm
Axial driven tool H=75mm
Axial angetriebenes Werkzeug H=75mm

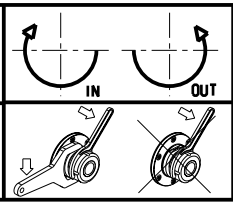

M.T. srl
Via Casino Albini 480
Tel. 0541/956034-957884
Fax 0541/956341
47842 S. GIOVANNI IN M. (RN)
e-mail: mtma@mtmarchetti.com
http://www.mtmarchetti.com

Subject to change without notice.

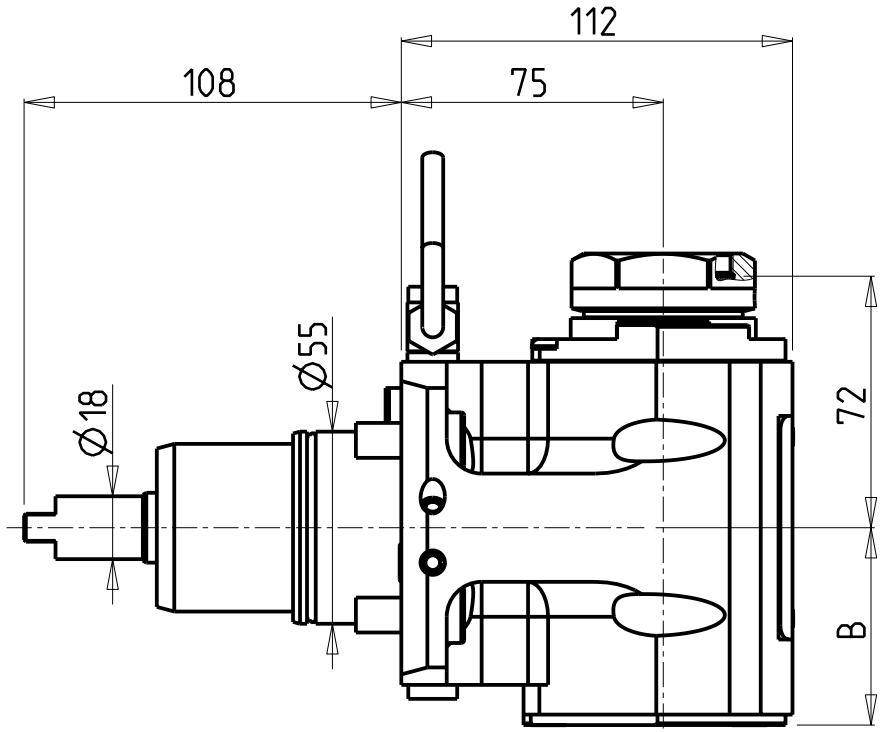

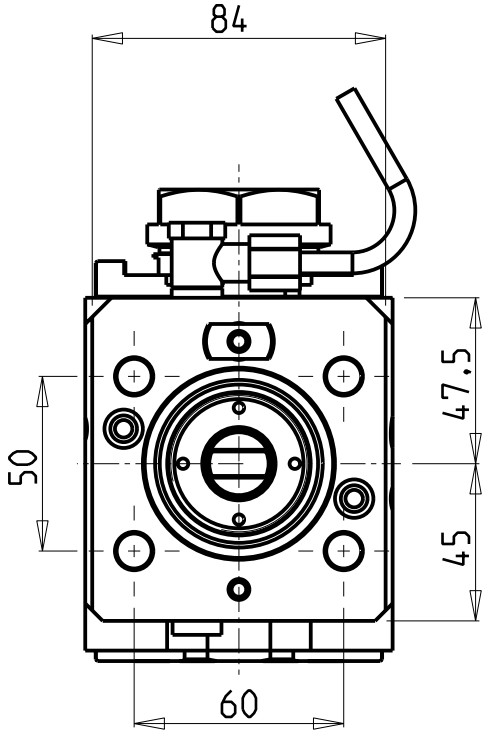

ATTENZIONE - ATTENTION - ACHTUNG

- VERIFICARE LE MISURE DI INGOMBRO PER POSSIBILE INTERFERENZA SU ALCUNI MODELLI DI MACCHINE
- Please check the overall sizes for possible interferences on some machine models
- Bitte überprüfen sie das ausmass um mögliche interferenzen auf einigen maschinen modellen zu vermeiden

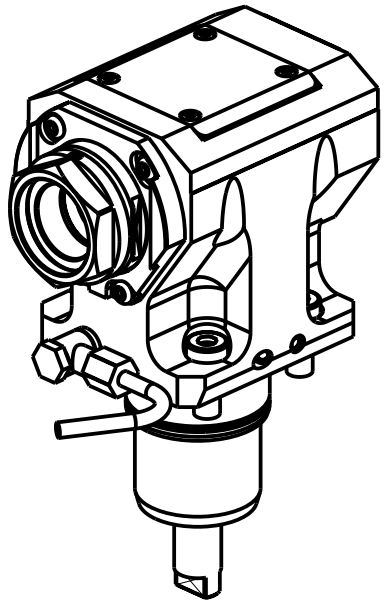

PER PORTAUTENSILI MODULARI MTSK-40 VEDI PAG. TBL300-1-40
FOR MTSK-40 QUIK CHANGE TOOLHOLDERS CLAMPINGS SEE PAGE TBL300-1-40
FUER MTSK-40 MODULARE WERKZEUGAUFNAHMEN SIEHE SEITE TBL300-1-40

Cod. MT	Mandrino Spindle Spindel	I	RPM	Coppia Max Max Torque Max Drehmoment	Reversibile lato mandrino/contromandrino Reversible sub/main spindle side Umkehrbare Spindelseite/ Gegenspindelseite	Lubrificazione int. Coolant through Innenkuehlung	Lubrificazione est. Ext. coolant Aussenkuehlung	B	CHIAVI NON INCLUSE Keys not included Schluessel nicht einbegriffen	
NKM1410140	MTSK-40	1:1	6000	50Nm	X	-	X	56.5	CHUB46	OKU0650004 *
NKM1410240	MTSK-40	1:1	6000	50Nm	X	P=70bar	X	67.5	CHUB46	OKU0650004 *

- Chiave inclusa
- Key included
- Schluessel inbegriffen

CMZ
MOD: TX52 Y3/Y2 QUATTRO/Y2 TWIN - TX66 Y3/Y2 QUATTRO/Y2 TWIN - TTL 52 - TTL 66
TA15-20-25-30M/Y/MS/MY/YS 15 ST.

MODULO MOTORIZZATO ASSIALE MTSK H=75mm
Axial MTSK driven tool H=75mm
Axial MTSK angetriebenes Werkzeug H=75mm

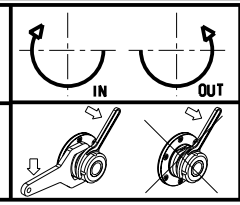

M.T. srl
Via Casino Albini 480
Tel. 0541/956034-957884
Fax 0541/956341
47842 S. GIOVANNI IN M. (RN)
e-mail: mtma@mtmarchetti.com
http://www.mtmarchetti.com

MT®

PAGINA CMZ150-3-21-K

Subject to change without notice.

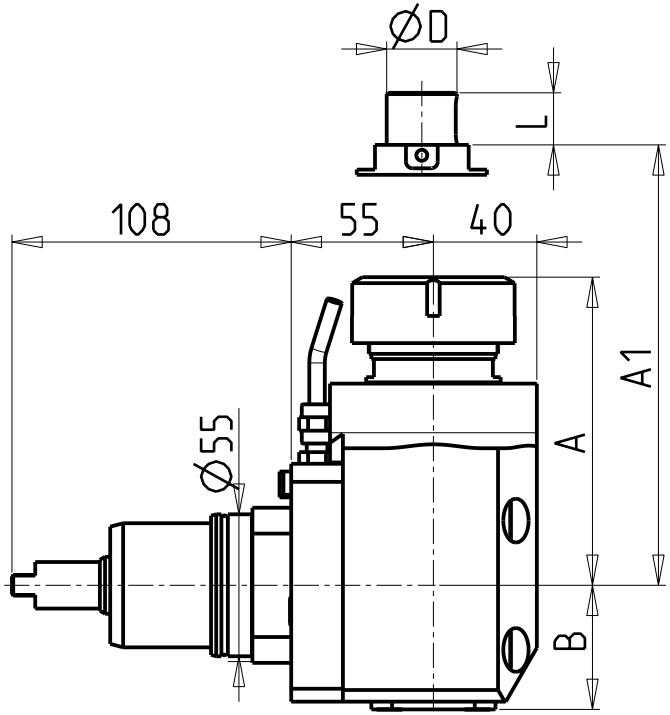

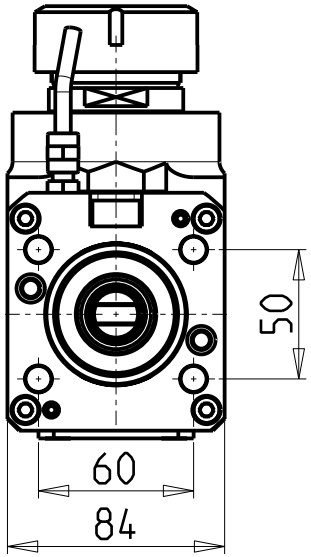

CUSCINETTI MAGGIORATI PER LAVORAZIONI PESANTI

Reinforced bearings for heavy machining

Vergroesserte lager fuer schwerere Bearbeitungen

ATTENZIONE - ATTENTION - ACHTUNG

- Per lo smontaggio degli utensili utilizzare sempre la chiave di contrasto come indicato nel manuale d'uso.
- For disassembly of the tools use always the contrast key as mentioned in the user instructions.
- Fuer das Abmontieren der Werkzeuge immer den Gegenschluessel benutzen wie in der Bedienungsanleitung erwaehnt.

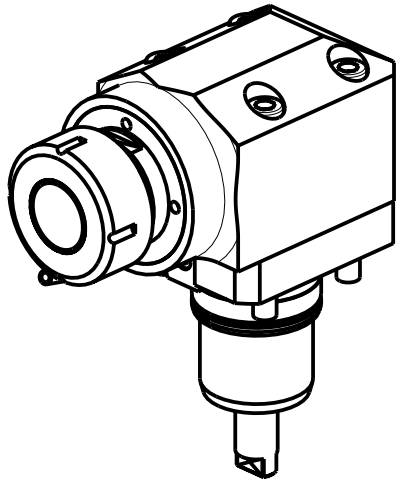

- Chiave inclusa
- Key included
- Schluessel inbegriffen

Cod. MT	Mandrino Spindle Spindel	I	RPM	Coppia Max Max Torque Max Drehmoment	Reversibile lato mandrino/contromandrino Reversible sub/main spindle side Umkehrbare Spindelseite/ Gegenspindelseite	Lubr.interna Coolant through Innenkuehlung	Lubrificazione est. Ext. coolant Aussenkuehlung	A	B	A1	ØD	L	CHIAVI NON INCLUSE Keys not included Schluessel nicht einbegriffen	
NKM0070140	ER40	1:1	6000	50Nm	X	-	X	119.16	48	-	-	-	CHUB46	CHSTER40
NKM0070240	ER40	1:1	6000	50Nm	X	P=70bar	X	119.16	58	-	-	-	CHUB46	CHSTER40
NKM0072519	Ø1"x19	1:1	6000	50Nm	X	-	X	-	48	91.5	1"	19	CHUB46	CH_VTCROCE_M12 •
NKM0072721	Ø27x21	1:1	6000	50Nm	X	-	X	-	48	91.5	27	20	CHUB36	CH_VTCROCE_M12 •

CMZ

MOD: TX52 Y3/Y2 QUATTRO/Y2 TWIN - TX66 Y3/Y2 QUATTRO/Y2 TWIN - TTL 52 - TTL 66
TA15-20-25-30M/Y/MS/MY/YS 15 ST.

MODULO MOTORIZZATO ASSIALE MAGGIORATO H=55mm
Axial reinforced driven tool H=55mm
Axial angetriebenes Werkzeug vergroessert H=55mm

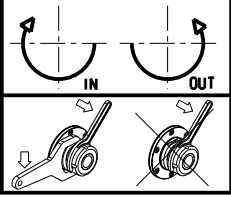

M.T. srl
Via Casino Albini 480
Tel. 0541/956034-957884
Fax 0541/956341
47842 S. GIOVANNI IN M. (RN)
e-mail: mtma@mtmarchetti.com
http://www.mtmarchetti.com

Subject to change without notice.

CUSCINETTI MAGGIORATI PER LAVORAZIONI PESANTI

Reinforced bearings for heavy machining

Vergroesserte lager fuer schwerere Bearbeitungen

ATTENZIONE - ATTENTION - ACHTUNG

- Per lo smontaggio degli utensili utilizzare sempre la chiave di contrasto come indicato nel manuale d'uso.
- For disassembly of the tools use always the contrast key as mentioned in the user instructions.
- Fuer das Abmontieren der Werkzeuge immer den Gegenschluessel benutzen wie in der Bedienungsanleitung erwaehnt.

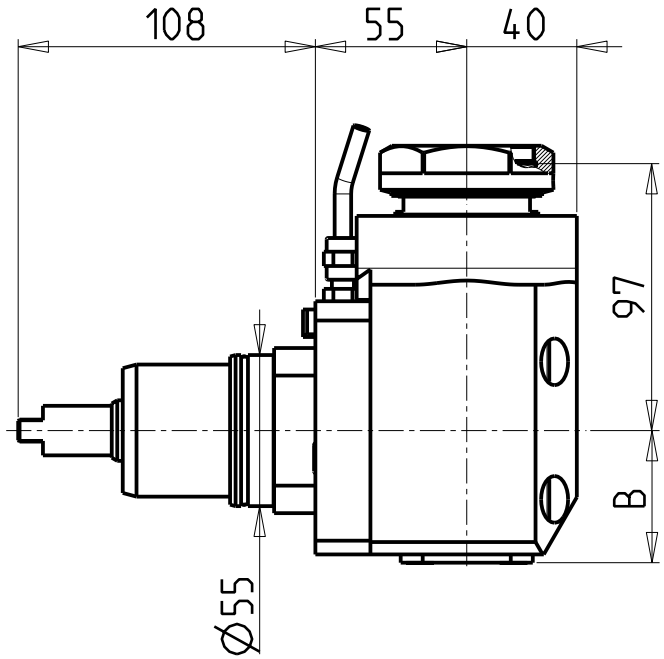

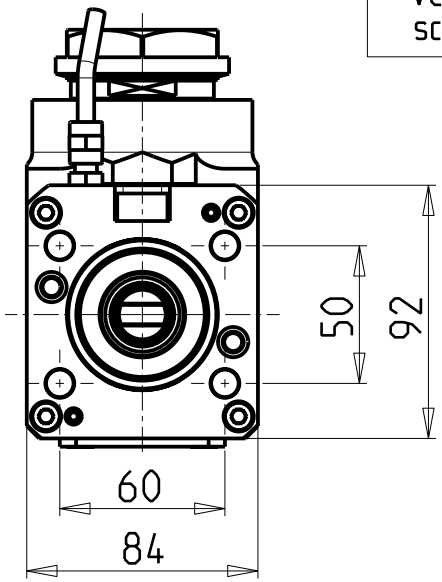

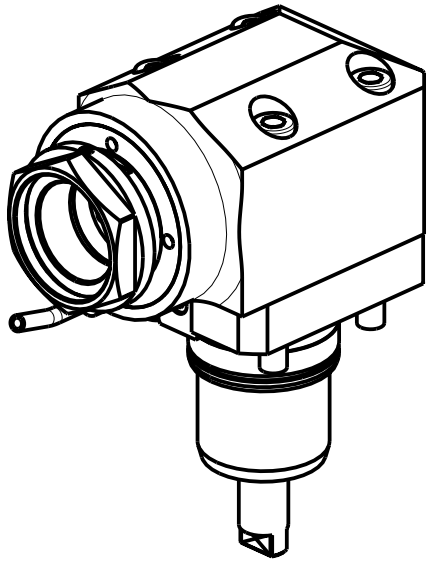

PER PORTAUTENSILI MODULARI MTSK-50 VEDI PAG. TBL300-1-50
FOR MTSK-50 QUIK CHANGE TOOLHOLDERS CLAMPINGS SEE PAGE TBL300-1-50
FUER MTSK-50 MODULARE WERKZEUGAUFNAHMEN SIEHE SEITE TBL300-1-50

Cod. MT	Mandrino Spindle Spindel	I	RPM	Coppia Max Max Torque Max Drehmoment	Reversibile lato mandrino/contromandrino Reversible sub/main spindle side Umkehrbare Spindelseite/ Gegenspindelseite	Lubr.interna Coolant through Innenkuehlung	Lubrificazione est. Ext. coolant Aussenkuehlung	B	CHIAVI NON INCLUSE Keys not included Schluessel nicht einbegriffen	
NKM1000150	MTSK-50	1:1	6000	50Nm	X	-	X	48	CHUB46	CHUB55
NKM1000250	MTSK-50	1:1	6000	50Nm	X	P=70bar	X	58	CHUB46	CHUB55

CMZ
MOD: TX52 Y3/Y2 QUATTRO/Y2 TWIN - TX66 Y3/Y2 QUATTRO/Y2 TWIN - TTL 52 - TTL 66
TA15-20-25-30M/Y/MS/MY/YS 15 ST.

MODULO MOTORIZZATO ASSIALE MAGGIORATO MTSK H=55mm
Axial MTSK reinforced driven tool H=55mm
Axial MTSK angetriebenes Werkzeug vergroessert H=55mm

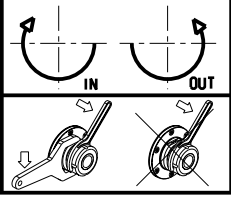

M.T. srl
Via Casino Albini 480
Tel. 0541/956034-957884
Fax 0541/956341
47842 S. GIOVANNI IN M. (RN)
e-mail: mtma@mtmarchetti.com
http://www.mtmarchetti.com

Subject to change without notice.

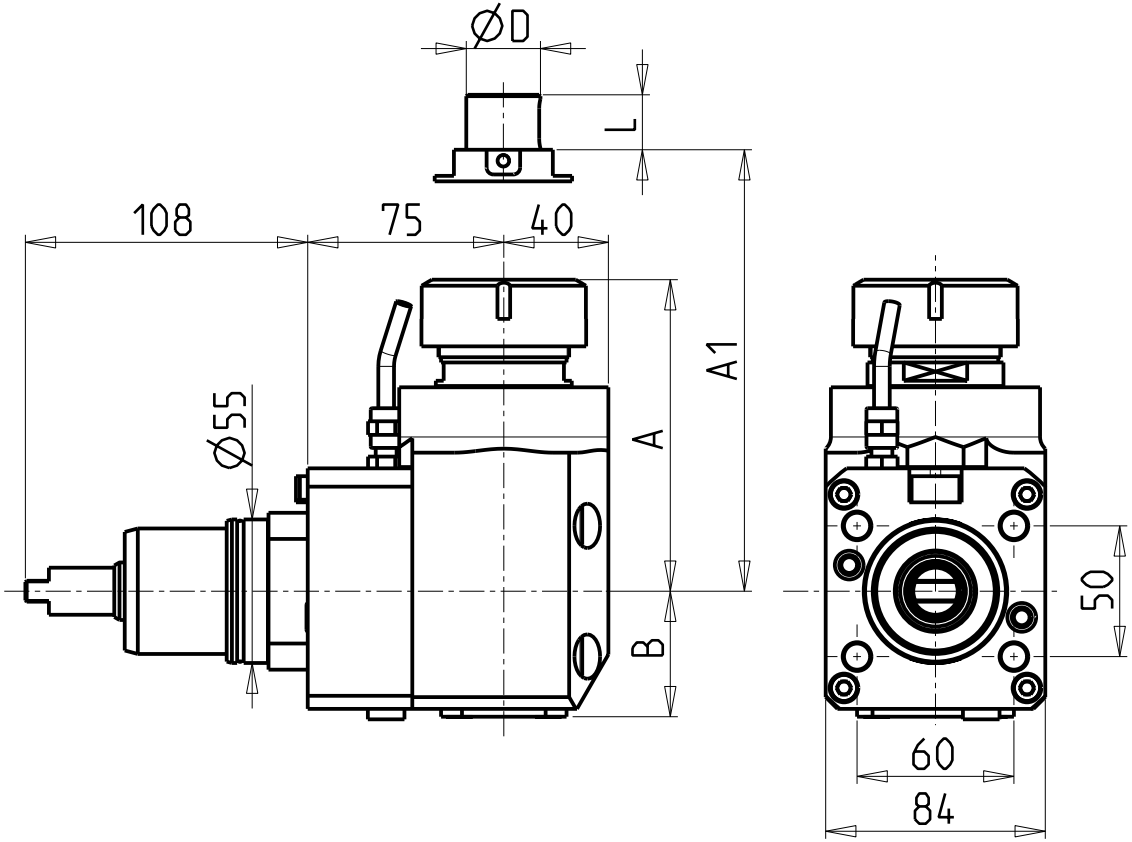

CUSCINETTI MAGGIORATI PER LAVORAZIONI PESANTI

Reinforced bearings for heavy machining

Vergroesserte lager fuer schwerere Bearbeitungen

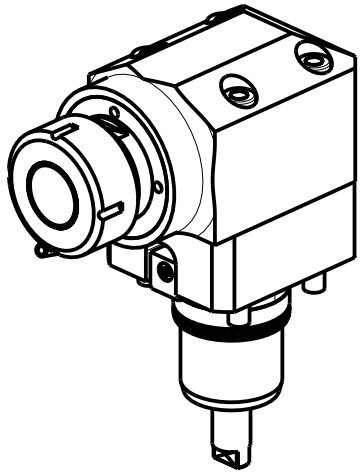

ATTENZIONE - ATTENTION - ACHTUNG

- Per lo smontaggio degli utensili utilizzare sempre la chiave di contrasto come indicato nel manuale d'uso.
- For disassembly of the tools use always the contrast key as mentioned in the user instructions.
- Fuer das Abmontieren der Werkzeuge immer den Gegenschluessel benutzen wie in der Bedienungsanleitung erwaehnt.

ATTENZIONE - ATTENTION - ACHTUNG

- VERIFICARE LE MISURE DI INGOMBRO PER POSSIBILE INTERFERENZA SU ALCUNI MODELLI DI MACCHINE
- Please check the overall sizes for possible interferences on some machine models
- Bitte überprüfen sie das ausmass um mögliche interferenzen auf einigen maschinen modellen zu vermeiden

- Chiave inclusa
- Key included
- Schluessel inbegriffen

Cod. MT	Mandrino Spindle Spindel	I	RPM	Coppia Max Max Torque Max Drehmoment	Reversibile lato mandrino/contromandrino Reversible sub/main spindle side Umkehrbare Spindelseite/ Gegenspindelseite	Lubr.interna Coolant through Innenkuehlung	Lubrificazione est. Ext. coolant Aussenkuehlung	A	B	A1	ØD	L	CHIAVI NON INCLUSE Keys not included Schluessel nicht einbegriffen	
NKM0990140	ER40	1:1	6000	50Nm	X	-	X	119.16	48	-	-	-	CHUB46	CHSTER40
NKM0990240	ER40	1:1	6000	50Nm	X	P=70bar	X	119.16	58	-	-	-	CHUB46	CHSTER40
NKM0992519	Ø1"x19	1:1	6000	50Nm	X	-	X	-	48	91.5	1"	19	CHUB46	CH_VTCROCE_M12 •
NKM0992721	Ø27x21	1:1	6000	50Nm	X	-	X	-	48	91.5	27	20	CHUB36	CH_VTCROCE_M12 •

CMZ

MOD: TX52 Y3/Y2 QUATTRO/Y2 TWIN - TX66 Y3/Y2 QUATTRO/Y2 TWIN - TTL 52 - TTL 66

MODULO MOTORIZZATO ASSIALE MAGGIORATO H=75mm
Axial reinforced driven tool H=75mm
Axial angetriebenes Werkzeug vergroessert H=75mm

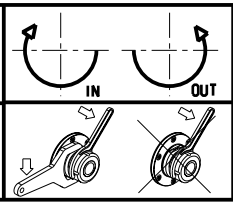

M.T. srl
Via Casino Albini 480
Tel. 0541/956034-957884
Fax 0541/956341
47842 S. GIOVANNI IN M. (RN)
e-mail: mtma@mtmarchetti.com
http://www.mtmarchetti.com

MT®

Subject to change without notice.

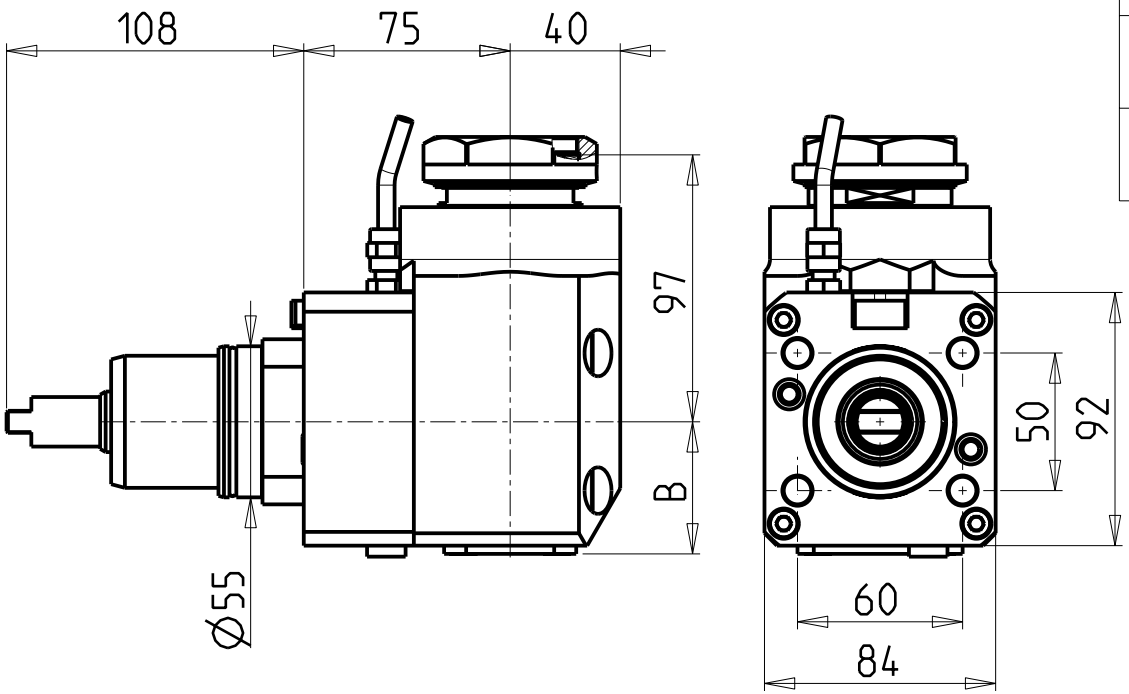

CUSCINETTI MAGGIORATI PER LAVORAZIONI PESANTI

Reinforced bearings for heavy machining

Vergroesserte lager fuer schwerere Bearbeitungen

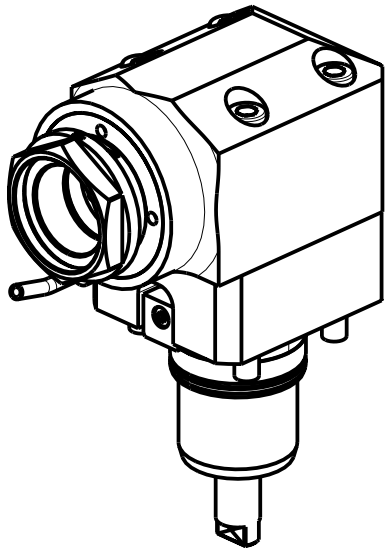

ATTENZIONE - ATTENTION - ACHTUNG

- Per lo smontaggio degli utensili utilizzare sempre la chiave di contrasto come indicato nel manuale d'uso.
- For disassembly of the tools use always the contrast key as mentioned in the user instructions.
- Fuer das Abmontieren der Werkzeuge immer den Gegenschluessel benutzen wie in der Bedienungsanleitung erwaehnt.

ATTENZIONE - ATTENTION - ACHTUNG

- VERIFICARE LE MISURE DI INGOMBRO PER POSSIBILE INTERFERENZA SU ALCUNI MODELLI DI MACCHINE
- Please check the overall sizes for possible interferences on some machine models
- Bitte überprüfen sie das ausmass um mögliche interferenzen auf einigen maschinen modellen zu vermeiden

PER PORTAUTENSILI MODULARI MTSK-50 VEDI PAG. TBL300-1-50
FOR MTSK-50 QUIK CHANGE TOOLHOLDERS CLAMPINGS SEE PAGE TBL300-1-50
FUER MTSK-50 MODULARE WERKZEUGAUFNAHMEN SIEHE SEITE TBL300-1-50

Cod. MT	Mandrino Spindle Spindel	I	RPM	Coppia Max Max Torque Max Drehmoment	Reversibile lato mandrino/contromandrino Reversible sub/main spindle side Umkehrbare Spindelseite/ Gegenspindelseite	Lubr.interna Coolant through Innenkuehlung	Lubrificazione est. Ext. coolant Aussenkuehlung	B	CHIAVI NON INCLUSE Keys not included Schluessel nicht einbegriffen	
NKM1010150	MTSK-50	1:1	6000	50Nm	X	-	X	48	CHUB46	CHUB55
NKM1010250	MTSK-50	1:1	6000	50Nm	X	P=70bar	X	58	CHUB46	CHUB55

CMZ

MOD: TX52 Y3/Y2 QUATTRO/Y2 TWIN - TX66 Y3/Y2 QUATTRO/Y2 TWIN - TTL 52 - TTL 66

MODULO MOTORIZZATO ASSIALE MAGGIORATO MTSK H=75mm
Axial MTSK reinforced driven tool H=75mm
Axial MTSK angetriebenes Werkzeug vergroessert H=75mm

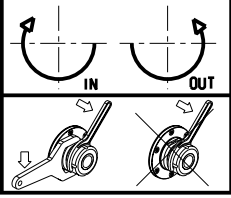

M.T. srl
Via Casino Albini 480
Tel. 0541/956034-957884
Fax 0541/956341
47842 S. GIOVANNI IN M. (RN)
e-mail: mtma@mtmarchetti.com
http://www.mtmarchetti.com

Subject to change without notice.

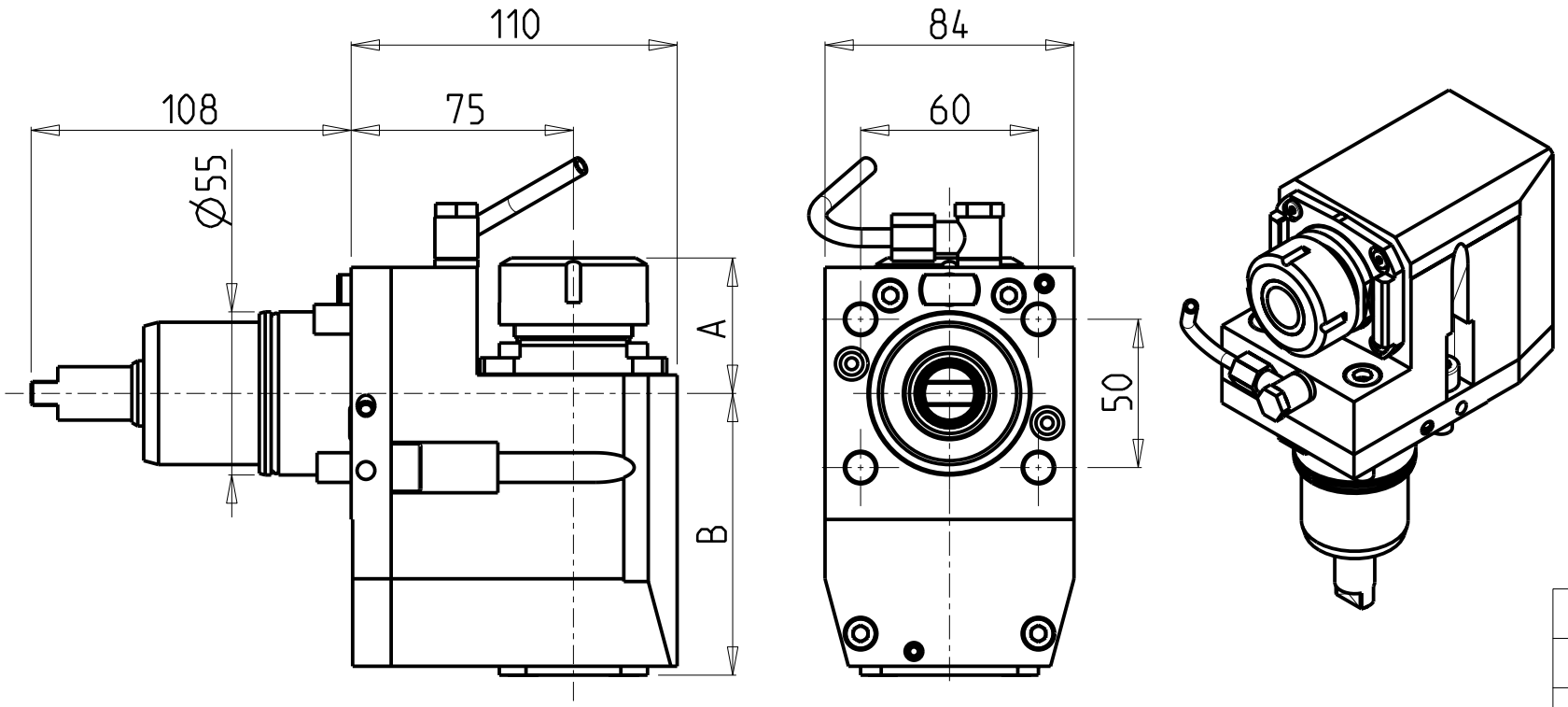

ATTENZIONE - ATTENTION - ACHTUNG

- VERIFICARE LE MISURE DI INGOMBRO PER POSSIBILE INTERFERENZA SU ALCUNI MODELLI DI MACCHINE
- Please check the overall sizes for possible interferences on some machine models
- Bitte überprüfen sie das ausmass um mögliche interferenzen auf einigen maschinen modellen zu vermeiden

- Chiave inclusa
- Key included
- Schluessel inbegriffen

Cod. MT	Mandrino Spindle Spindel	I	RPM	Coppia Max Max Torque Max Drehmoment	Reversibile lato mandrino/contromandrino Reversible sub/main spindle side Umkehrbare Spindelseite/ Gegenspindelseite	Lubr.interna Coolant through Innenkuehlung	Lubrificazione est. Ext. coolant Aussenkuehlung	A	B	CHIAVI NON INCLUSE Keys not included Schluessel nicht einbegriffen	
NKM1080125	ER25	1:1	6000	50Nm	X	-	X	42.7	95	MNZ0410005 •	CHSTER25
NKM1080225	ER25	1:1	6000	50Nm	X	P=70bar	X	42.7	108.5	MNZ0410005 •	CHSTER25
NKM1080132	ER32	1:1	6000	50Nm	X	-	X	45.7	95	MNZ0410005 •	CHSTER32
NKM1080232	ER32	1:1	6000	50Nm	X	P=70bar	X	45.7	108.5	MNZ0410005 •	CHSTER32

CMZ

MOD: TX52 Y3/Y2 QUATTRO/Y2 TWIN - TX66 Y3/Y2 QUATTRO/Y2 TWIN - TTL 52 - TTL 66
TA15-20-25-30M/Y/MS/MY/YS 15 ST.

MODULO MOTORIZZATO ASSIALE ARRETRATO H=75mm
Axial rear-set driven tool H=75mm
Axial angetriebenes Werkzeug zurueckversetzt H=75mm

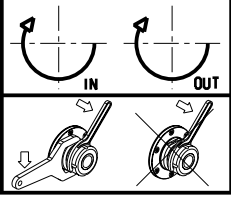

M.T. srl
Via Casino Albini 480
Tel. 0541/956034-957884
Fax 0541/956341
47842 S. GIOVANNI IN M. (RN)
e-mail: mtma@mtmarchetti.com
http://www.mtmarchetti.com

Subject to change without notice.

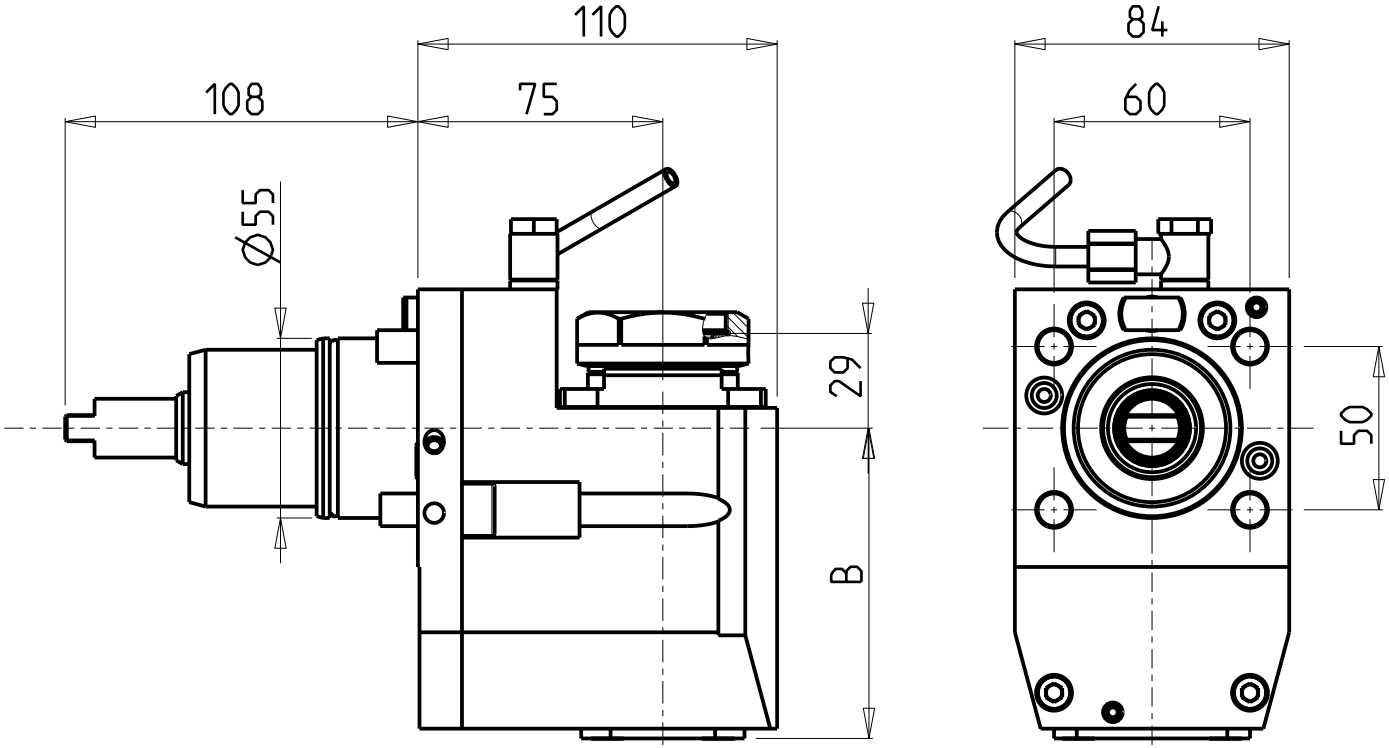

ATTENZIONE - ATTENTION - ACHTUNG

- VERIFICARE LE MISURE DI INGOMBRO PER POSSIBILE INTERFERENZA SU ALCUNI MODELLI DI MACCHINE
- Please check the overall sizes for possible interferences on some machine models
- Bitte überprüfen sie das ausmass um mögliche interferenzen auf einigen maschinen modellen zu vermeiden

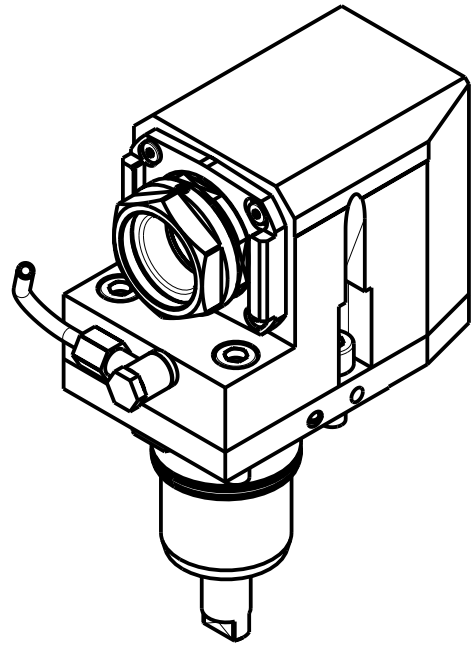

PER PORTAUTENSILI MODULARI MTSK-40 VEDI PAG. TBL300-1-40
FOR MTSK-40 QUIK CHANGE TOOLHOLDERS CLAMPINGS SEE PAGE TBL300-1-40
FUER MTSK-40 MODULARE WERKZEUGAUFNAHMEN SIEHE SEITE TBL300-1-40

Cod. MT	Mandrino Spindle Spindel	I	RPM	Coppia Max Max Torque Max Drehmoment	Reversibile lato mandrino/contromandrino Reversible sub/main spindle side Umkehrbare Spindelseite/ Gegenspindelseite	Lubrificazione int. Coolant through Innenkuehlung	Lubrificazione est. Ext. coolant Aussenkuehlung	B	CHIAVI NON INCLUSE Keys not included Schluessel nicht einbegriffen	
NKM1140140	MTSK-40	1:1	6000	50Nm	X	-	X	95	CHUB46	MNZ0410005 •
NKM1140240	MTSK-40	1:1	6000	50Nm	X	P=70bar	X	108.5	CHUB46	MNZ0410005 •

- Chiave inclusa
- Key included
- Schluessel inbegriffen

CMZ
MOD: TX52 Y3/Y2 QUATTRO/Y2 TWIN - TX66 Y3/Y2 QUATTRO/Y2 TWIN - TTL 52 - TTL 66
TA15-20-25-30M/Y/MS/MY/YS 15 ST.

MODULO MOTORIZZATO RADIALE ARRETRATO MTSK H=75mm
Radial MTSK rear-set driven tool H=75mm
Radial MTSK angetriebenes Werkzeug zurueckversetzt H=75mm

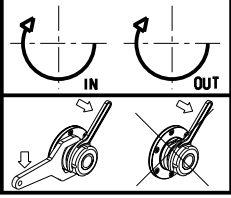

M.T. srl
Via Casino Albini 480
Tel. 0541/956034-957884
Fax 0541/956341
47842 S. GIOVANNI IN M. (RN)
e-mail: mtma@mtmarchetti.com
http://www.mtmarchetti.com

MT®

Subject to change without notice.

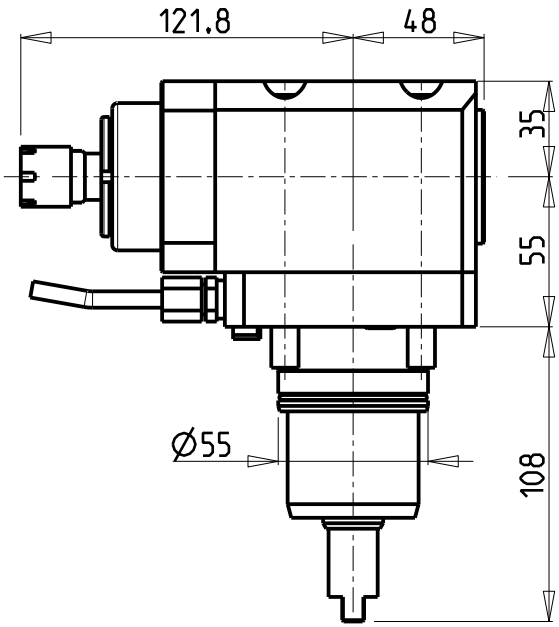

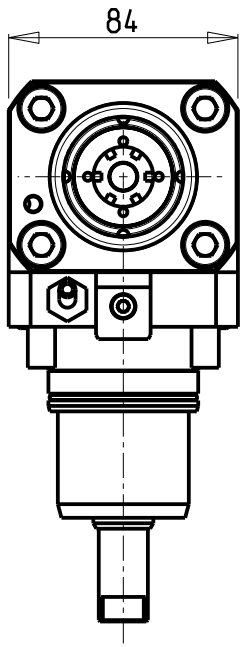

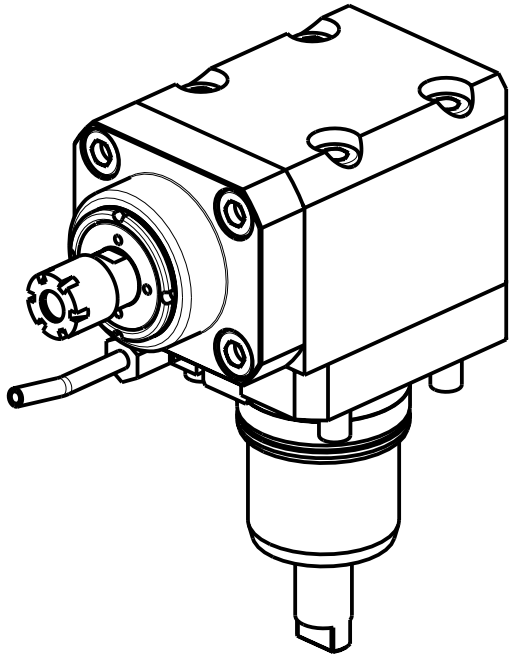

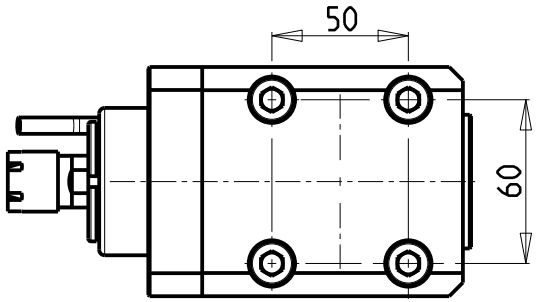

ATTENZIONE - ATTENTION - ACHTUNG

- Per lo smontaggio degli utensili utilizzare sempre la chiave di contrasto come indicato nel manuale d'uso.
- For disassembly of the tools use always the contrast key as mentioned in the user instructions.
- Fuer das Abmontieren der Werkzeuge immer den Gegenschluessel benutzen wie in der Bedienungsanleitung erwaehnt.

ATTENZIONE - ATTENTION - ACHTUNG

- PRIMA DI UTILIZZARE IL MOTORIZZATO CONSULTARE LE ISTRUZIONI ALLEGATE!
- BEFORE USING THE DRIVEN TOOL, PLEASE CHECK THE ENCLOSED INSTRUCTION SHEET!
- VOR DER BENUTZUNG DES ANGETRIEBENEN WERKZEUGES, DIE BEILIEGENDEN INSTRUKTIONEN DURCHLESEN!

Cod. MT	Mandrino Spindle Spindel	I	RPM	Coppia Max Max Torque Max Drehmoment	Reversibile lato mandrino/contromandrino Reversible sub/main spindle side Umkehrbare Spindelseite/ Gegenspindelseite	Lubrificazione est. Ext. coolant Aussenkuehlung	CHIAVI INCLUSE Keys included Schluessel einbegriffen	
NKM0050016	ER16	1:3	18000	10Nm	X	X	CHUB17	CHMNER16

CMZ

MOD: TX52 Y3/Y2 QUATTRO/Y2 TWIN - TX66 Y3/Y2 QUATTRO/Y2 TWIN - TTL 52 - TTL 66
TA15-20-25-30M/Y/MS/MY/YS 15 ST.

MODULO MOTORIZZATO ASSIALE MOLTIPLICATO I=1:3 H=55mm
Axial geared-up I=1:3 driven tool H=55mm
Axial angetriebenes Werkzeug uebersetzt I=1:3 H=55mm

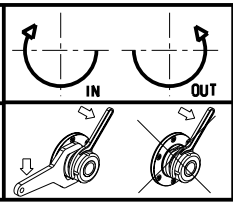

M.T. srl
Via Casino Albini 480
Tel. 0541/956034-957884
Fax 0541/956341
47842 S. GIOVANNI IN M. (RN)
e-mail: mtma@mtmarchetti.com
http://www.mtmarchetti.com

MT®

Subject to change without notice.

04/2022

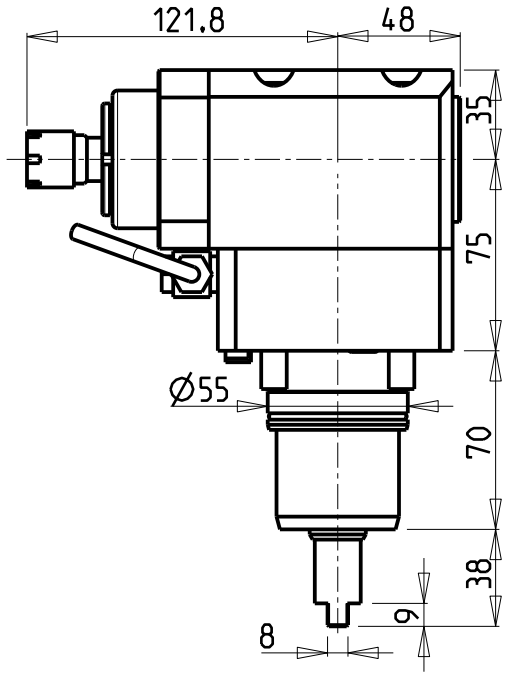

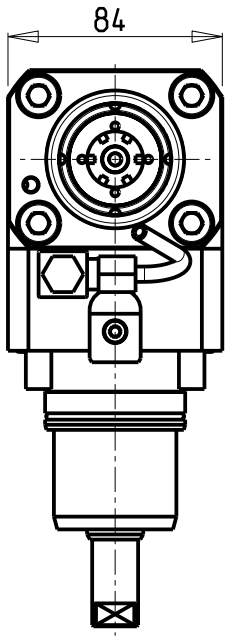

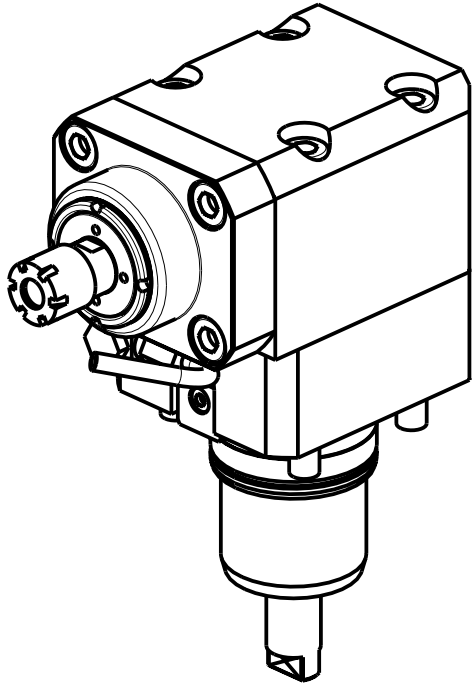

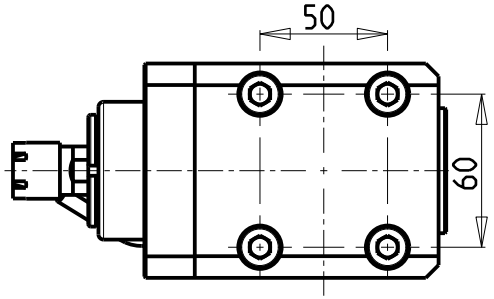

ATTENZIONE - ATTENTION - ACHTUNG

- Per lo smontaggio degli utensili utilizzare sempre la chiave di contrasto come indicato nel manuale d'uso.
- For disassembly of the tools use always the contrast key as mentioned in the user instructions.
- Fuer das Abmontieren der Werkzeuge immer den Gegenschluessel benutzen wie in der Bedienungsanleitung erwaehnt.

ATTENZIONE - ATTENTION - ACHTUNG

- PRIMA DI UTILIZZARE IL MOTORIZZATO CONSULTARE LE ISTRUZIONI ALLEGATE!
- BEFORE USING THE DRIVEN TOOL, PLEASE CHECK THE ENCLOSED INSTRUCTION SHEET!
- VOR DER BENUTZUNG DES ANGETRIEBENEN WERKZEUGES, DIE BEILIEGENDEN INSTRUKTIONEN DURCHLESEN!

ATTENZIONE - ATTENTION - ACHTUNG

- VERIFICARE LE MISURE DI INGOMBRO PER POSSIBILE INTERFERENZA SU ALCUNI MODELLI DI MACCHINE
- Please check the overall sizes for possible interferences on some machine models
- Bitte überprüfen sie das ausmass um mögliche interferenzen auf einigen maschinen modellen zu vermeiden

Cod. MT	Mandrino Spindle Spindel	I	RPM	Coppia Max Max Torque Max Drehmoment	Reversibile lato mandrino/contromandrino Reversible sub/main spindle side Umkehrbare Spindelseite/ Gegenspindelseite	Lubrificazione est. Ext. coolant Aussenkuehlung	CHIAVI INCLUSE Keys included Schluessel einbegriffen	
NKM0050216	ER16	1:3	18000	10Nm	X	X	CHUB17	CHMNER16

CMZ

MOD: TX52 Y3/Y2 QUATTRO/Y2 TWIN - TX66 Y3/Y2 QUATTRO/Y2 TWIN - TTL 52 - TTL 66
TA15-20-25-30M/Y/MS/MY/YS 15 ST.

MODULO MOTORIZZATO ASSIALE MOLTIPLICATO I=1:3 H=75mm
Axial geared-up I=1:3 driven tool H=75mm
Axial angetriebenes Werkzeug uebersetzt I=1:3 H=75mm

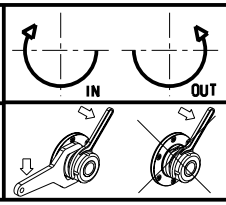

M.T. srl
Via Casino Albini 480
Tel. 0541/956034-957884
Fax 0541/956341
47842 S. GIOVANNI IN M. (RN)
e-mail: mtma@mtmarchetti.com
http://www.mtmarchetti.com

MT®

Subject to change without notice.

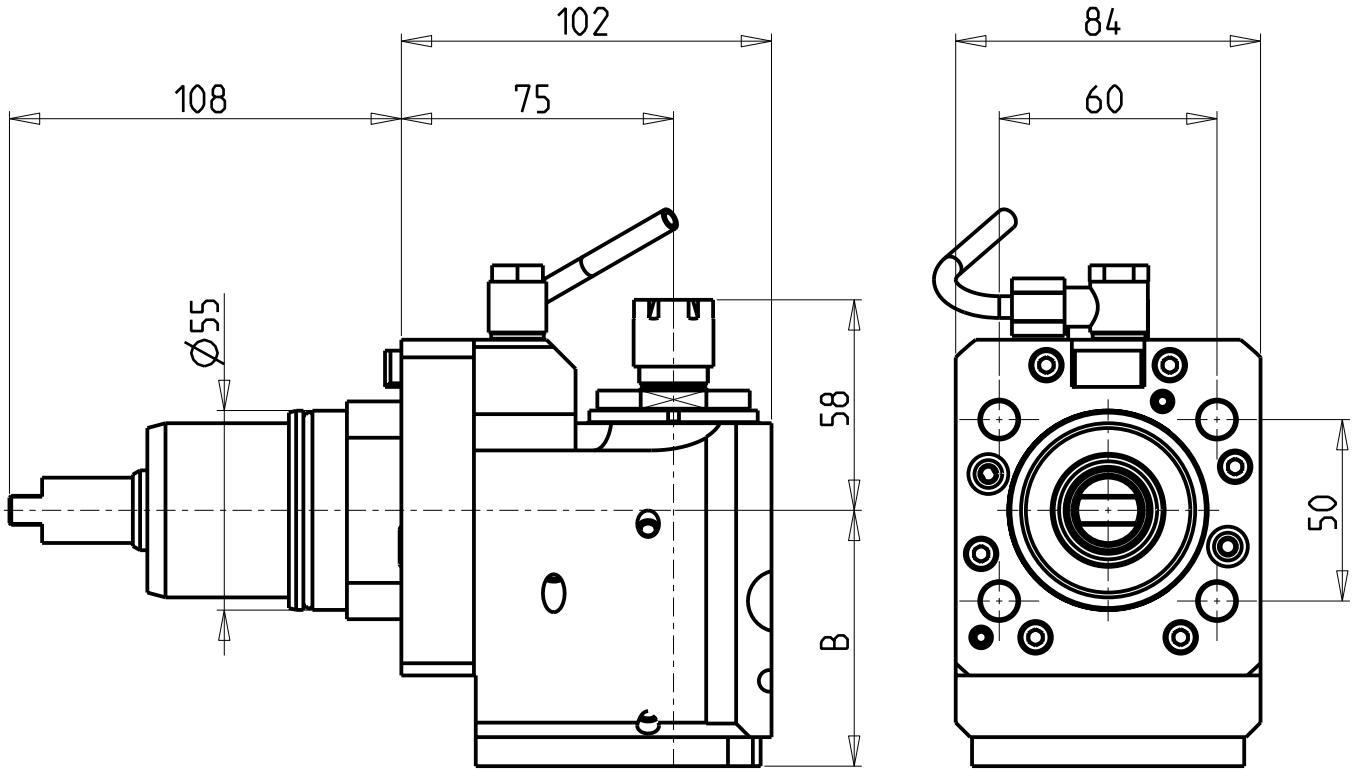

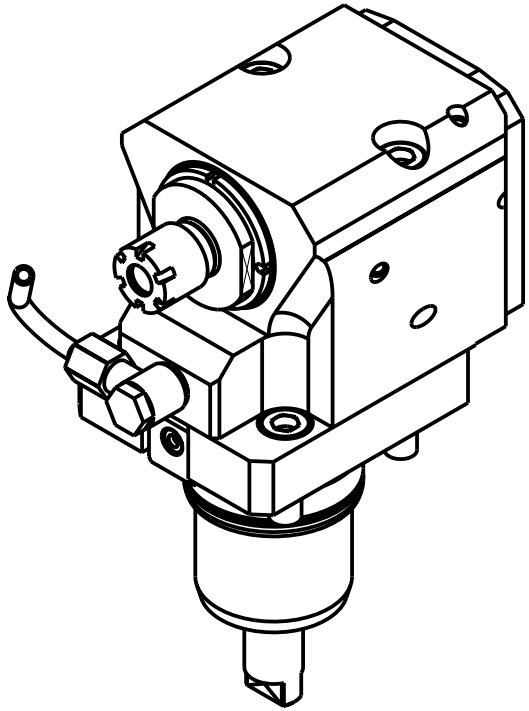

Cod. MT	Mandrino Spindle Spindel	I	RPM	Coppia Max Max Torque Max Drehmoment	Reversibile lato mandrino/contromandrino Reversible sub/main spindle side Umkehrbare Spindelseite/ Gegenspindelseite	Lubrificazione int. Coolant through Innenkuehlung	Lubrificazione est. Ext. coolant Aussenkuehlung	B	CHIAVI NON INCLUSE Keys not included Schluessel nicht einbegriffen	
NKM2040116	ER16	1:3	18000	20Nm	X	-	X	70.5	CHUB38	CHMNER16
NKM2040216	ER16	1:3	18000	20Nm	X	P=70bar	X	83	CHUB38	CHMNER16

CMZ

MOD: TX52 Y3/Y2 QUATTRO/Y2 TWIN - TX66 Y3/Y2 QUATTRO/Y2 TWIN - TTL 52 - TTL 66
TA15-20-25-30M/Y/MS/MY/YS 15 ST.

MODULO MOTORIZZATO ASSIALE ARRETRATO MOLTIPLICATO I=1:3 H=75mm
Axial geard-up I=1:3 rear-set driven tool H=75mm
Axial angetriebenes Werkzeug uebersetzt I=1:3 zurueckversetzt H=75mm

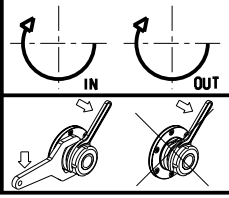

M.T. srl
Via Casino Albini 480
Tel. 0541/956034-957884
Fax 0541/956341
47842 S. GIOVANNI IN M. (RN)
e-mail: mtma@mtmarchetti.com
http://www.mtmarchetti.com

MT®

PAGINA CMZ226-3-10

Subject to change without notice.

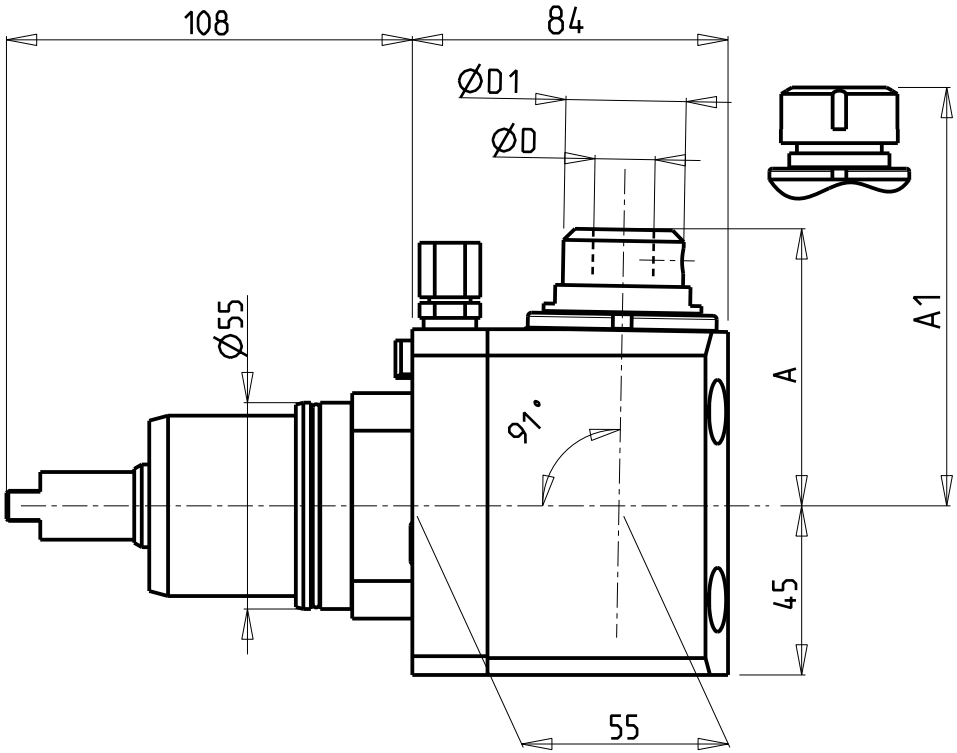

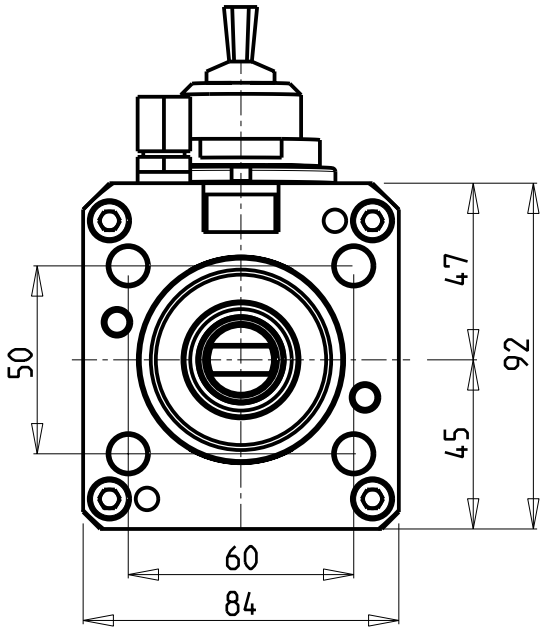

ATTENZIONE - ATTENTION - ACHTUNG

- Per lo smontaggio degli utensili utilizzare sempre la chiave di contrasto come indicato nel manuale d'uso.
- For disassembly of the tools use always the contrast key as mentioned in the user instructions.
- Fuer das Abmontieren der Werkzeuge immer den Gegenschluessel benutzen wie in der Bedienungsanleitung erwaehnt.

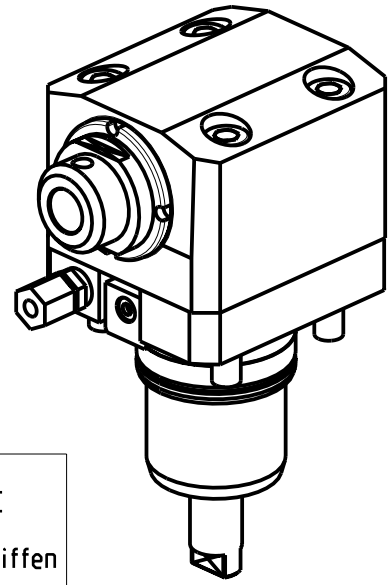

Cod. MT	Mandrino Spindle Spindel	I	RPM	Coppia Max Max Torque Max Drehmoment	Reversibile lato mandrino/contromandrino Reversible sub/main spindle side Umkehrbare Spindelseite/ Gegenspindelseite	Lubrificazione est. Ext. coolant Aussenkuhlung	A	A1	D	D1	CHIAVI NON INCLUSE Keys not included Schluessel nicht einbegriffen	
NKM0039125	ER25	1:1	6000	50Nm	X	X	-	80.44	-	-	CHUB36	CHSTER25
NKM0039108	WELDON 8	1:1	6000	50Nm	X	X	76.5	-	8	29	-	-
NKM0039110	WELDON 10	1:1	6000	50Nm	X	X	76.5	-	10	29	-	-
NKM0039112	WELDON 12	1:1	6000	50Nm	X	X	76.5	-	12	29	-	-
NKM0039116	WELDON 16	1:1	6000	50Nm	X	X	73.7	-	16	32	-	-

CMZ

MOD: TX52 Y3/Y2 QUATTRO/Y2 TWIN - TX66 Y3/Y2 QUATTRO/Y2 TWIN - TTL 52 - TTL 66
TA15-20-25-30M/Y/MS/MY/YS 15 ST.

MODULO MOTORIZZATO ASSIALE PER POLIGONATURA INTERNA H=55mm
Axial driven tool for internal polygon-making H=55mm
Axial angetriebenes Werkzeug fuer interne Facettierung H=55mm

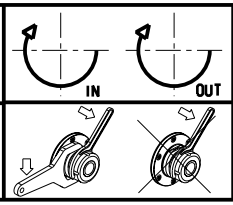

M.T. srl
Via Casino Albini 480
Tel. 0541/956034-957884
Fax 0541/956341
47842 S. GIOVANNI IN M. (RN)
e-mail: mtma@mtmarchetti.com
http://www.mtmarchetti.com

Subject to change without notice.

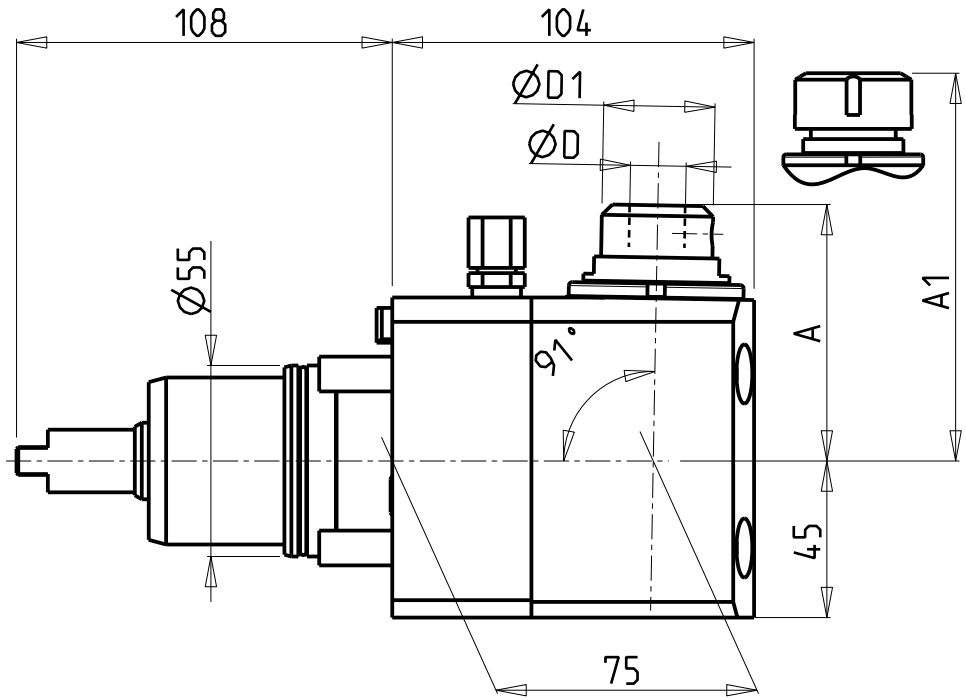

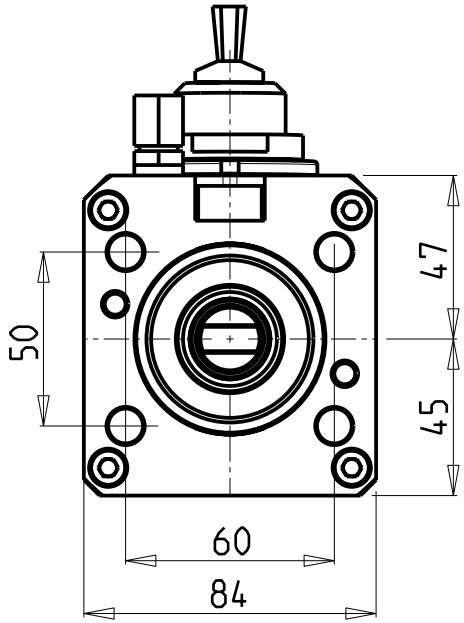

ATTENZIONE - ATTENTION - ACHTUNG

- Per lo smontaggio degli utensili utilizzare sempre la chiave di contrasto come indicato nel manuale d'uso.
- For disassembly of the tools use always the contrast key as mentioned in the user instructions.
- Fuer das Abmontieren der Werkzeuge immer den Gegenschluessel benutzen wie in der Bedienungsanleitung erwaehnt.

ATTENZIONE - ATTENTION - ACHTUNG

- VERIFICARE LE MISURE DI INGOMBRO PER POSSIBILE INTERFERENZA SU ALCUNI MODELLI DI MACCHINE
- Please check the overall sizes for possible interferences on some machine models
- Bitte überprüfen sie das ausmass um mögliche interferenzen auf einigen maschinen modellen zu vermeiden

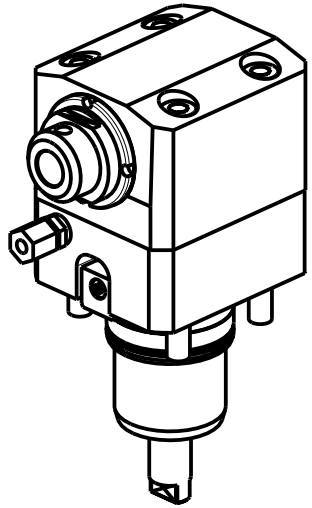

Cod. MT	Mandrino Spindle Spindel	I	RPM	Coppia Max Max Torque Max Drehmoment	Reversibile lato mandrino/contromandrino Reversible sub/main spindle side Umkehrbare Spindelseite/ Gegenspindelseite	Lubrificazione est. Ext. coolänt Aussenkuhlung	A	A1	D	D1	CHIAVI NON INCLUSE Keys not included Schluessel nicht einbegriffen	
NKM0069125	ER25	1:1	6000	50Nm	X	X	-	80.44	-	-	CHUB36	CHSTER25
NKM0069108	WELDON 8	1:1	6000	50Nm	X	X	76.5	-	8	29	-	-
NKM0069110	WELDON 10	1:1	6000	50Nm	X	X	76.5	-	10	29	-	-
NKM0069112	WELDON 12	1:1	6000	50Nm	X	X	76.5	-	12	29	-	-
NKM0069116	WELDON 16	1:1	6000	50Nm	X	X	73.7	-	16	32	-	-

CMZ

MOD: TX52 Y3/Y2 QUATTRO/Y2 TWIN - TX66 Y3/Y2 QUATTRO/Y2 TWIN - TTL 52 - TTL 66
TA15-20-25-30M/Y/MS/MY/YS 15 ST.

MODULO MOTORIZZATO ASSIALE PER POLIGONATURA INTERNA H=75mm
Axial driven tool for internal polygon-making H=75mm
Axial angetriebenes Werkzeug fuer interne Facettierung H=75mm

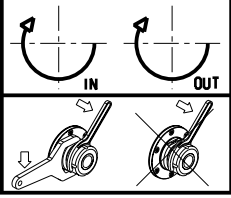

M.T. srl
Via Casino Albini 480
Tel. 0541/956034-957884
Fax 0541/956341
47842 S. GIOVANNI IN M. (RN)
e-mail: mtma@mtmarchetti.com
http://www.mtmarchetti.com

MT®

Subject to change without notice.

ATTENZIONE - ATTENTION - ACHTUNG

- VERIFICARE LE MISURE DI INGOMBRO PER POSSIBILE INTERFERENZA SU ALCUNI MODELLI DI MACCHINE
- Please check the overall sizes for possible interferences on some machine models
- Bitte überprüfen sie das ausmass um mögliche interferenzen auf einigen maschinen modellen zu vermeiden

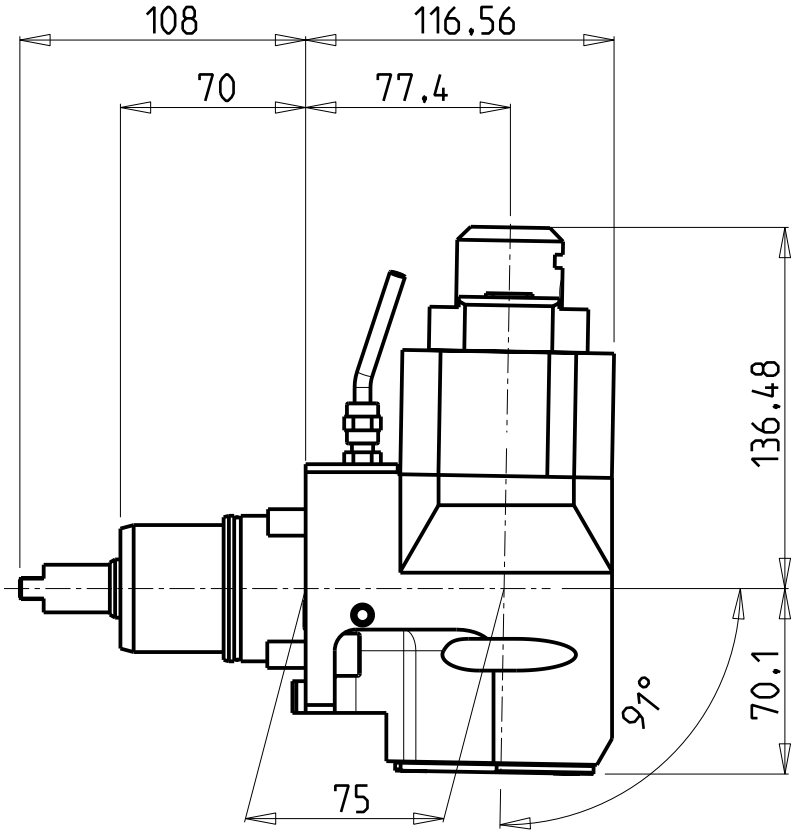

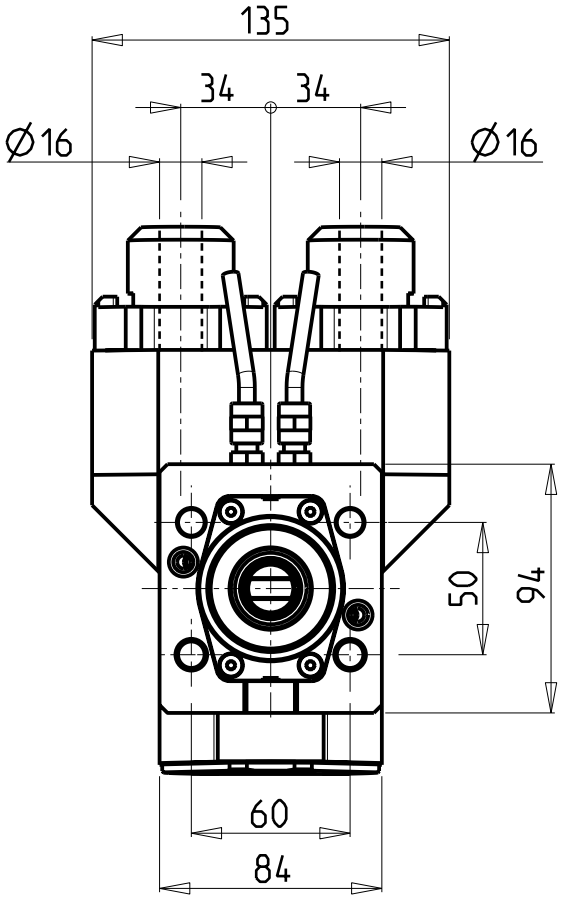

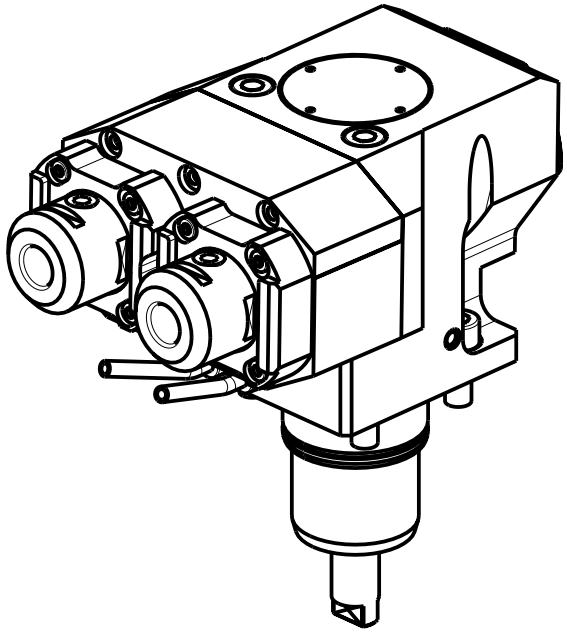

Cod. MT	Mandrino Spindle Spindel	I	RPM	Coppia Max Max Torque Max Drehmoment	Reversibile lato mandrino/contromandrino Reversible sub/main spindle side Umkehrbare Spindelseite/ Gegenspindelseite	Lubr.esterna Ext. coolant Aussenkuehlung	CHIAVI INCLUSE Keys included Schluessel inbegriffen
NKM1250616	WELDON 16	1:1	6000	30Nm	X	X	SAU0070027

CMZ

MOD: TX52 Y3/Y2 QUATTRO/Y2 TWIN - TX66 Y3/Y2 QUATTRO/Y2 TWIN - TTL 52 - TTL 66
TA15-20-25-30M/Y/MS/MY/YS 15 ST.

MODULO MOTORIZZATO ASSIALE 2 USCITE IN Y PER POLIGONATURA INTERNA H=75mm
Axial single side twin head driven tool in Y for internal polygon-making H=75mm
Axial angetriebenes Werkzeug 2 Ausgange in Y fuer interne Facettierung H=75mm

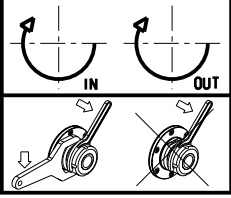

M.T. srl
Via Casino Albini 480
Tel. 0541/956034-957884
Fax 0541/956341
47842 S. GIOVANNI IN M. (RN)
e-mail: mtma@mtmarchetti.com
http://www.mtmarchetti.com

Subject to change without notice.

ATTENZIONE - ATTENTION - ACHTUNG

- Per lo smontaggio degli utensili utilizzare sempre la chiave di contrasto come indicato nel manuale d'uso.
- For disassembly of the tools use always the contrast key as mentioned in the user instructions.
- Fuer das Abmontieren der Werkzeuge immer den Gegenschluessel benutzen wie in der Bedienungsanleitung erwaehnt.

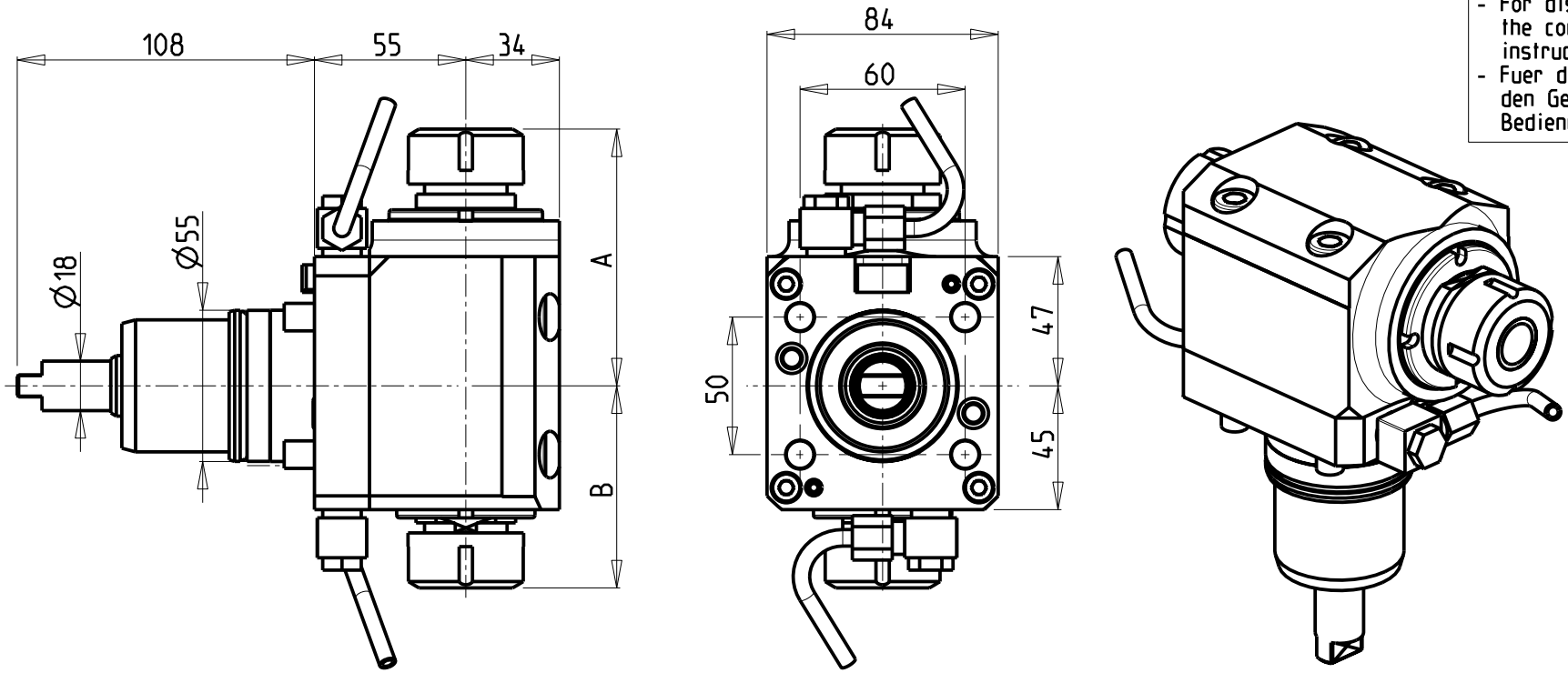

Cod. MT	Mandrino Spindle Spindel	I	RPM	Coppia Max Max Torque Max Drehmoment	Reversibile lato mandrino/contromandrino Reversible sub/main spindle side Umkehrbare Spindelseite/ Gegenspindelseite	Lubrificazione est. Ext. coolant Aussenkuehlung	A	B	CHIAVI NON INCLUSE Keys not included Schluessel nicht einbegriffen	
NKM0492525	ER25+ER25	1:1	6000	50Nm	X	X	93.36	73.46	CHSTER25	CHUB36+CHUB29
NKM0493232	ER32+ER32	1:1	6000	50Nm	X	X	100.56	78.96	CHSTER32	CHUB36

CMZ

MOD: TX52 Y3/Y2 QUATTRO/Y2 TWIN - TX66 Y3/Y2 QUATTRO/Y2 TWIN - TTL 52 - TTL 66
TA15-20-25-30M/Y/MS/MY/YS 15 ST.

MODULO MOTORIZZATO ASSIALE BISPORGENTE H=55mm
Axial opposite face twin driven tool H=55mm
Axial angetriebenes Werkzeug halb vorspringend H=55mm

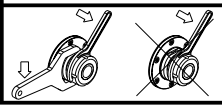

M.T. srl
Via Casino Albini 480
Tel. 0541/956034-957884
Fax 0541/956341
47842 S. GIOVANNI IN M. (RN)
e-mail: mtma@mtmarchetti.com
http://www.mtmarchetti.com

Subject to change without notice.

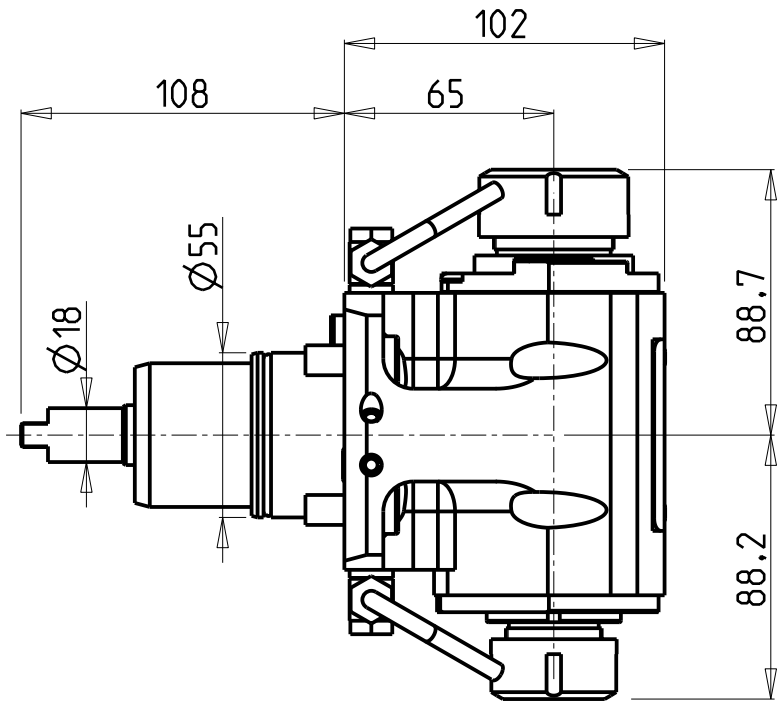

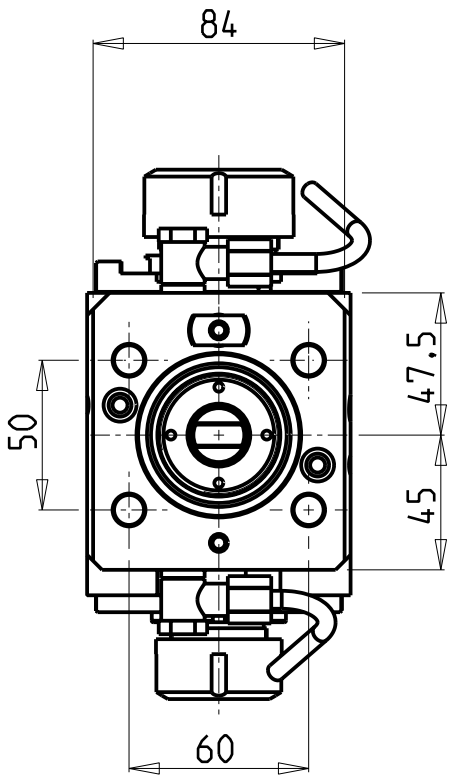

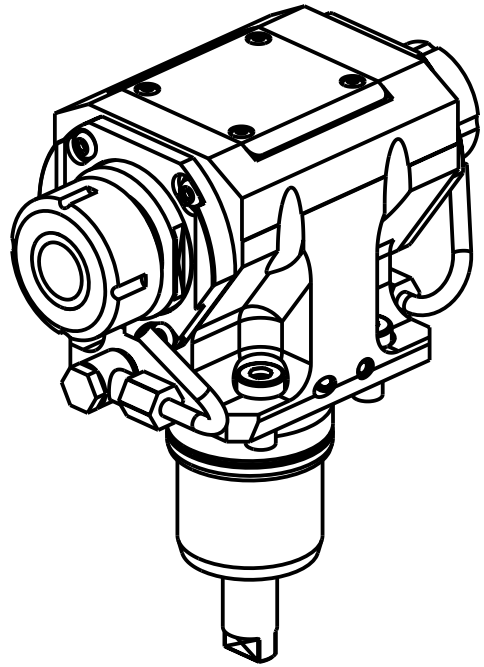

Cod. MT	Mandrino Spindle Spindel	I	RPM	Coppia Max Max Torque Max Drehmoment	Reversibile lato mandrino/contromandrino Reversible sub/main spindle side Umkehrbare Spindelseite/ Gegenspindelseite	Lubrificazione est. Ext. coolant Aussenkuehlung	CHIAVI NON INCLUSE Keys not included Schluessel nicht einbegriffen		
NKM2103225	ER32+ER25	1:1	6000	50Nm	X	X	CHSTER32	CHSTER25	OKU0650004 ▪

▪ Chiave inclusa
▪ Key included
▪ Schluessel inbegriffen

CMZ

MOD: TX52 Y3/Y2 QUATTRO/Y2 TWIN - TX66 Y3/Y2 QUATTRO/Y2 TWIN - TTL 52 - TTL 66
TA15-20-25-30M/Y/MS/MY/YS 15 ST.

MODULO MOTORIZZATO ASSIALE BISPORGENTE H=65mm
Axial opposite face twin driven tool H=65mm
Axial angetriebenes Werkzeug halb vorspringend H=65mm

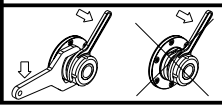

M.T. srl
Via Casino Albini 480
Tel. 0541/956034-957884
Fax 0541/956341
47842 S. GIOVANNI IN M. (RN)
e-mail: mtma@mtmarchetti.com
http://www.mtmarchetti.com

MT®

Subject to change without notice.

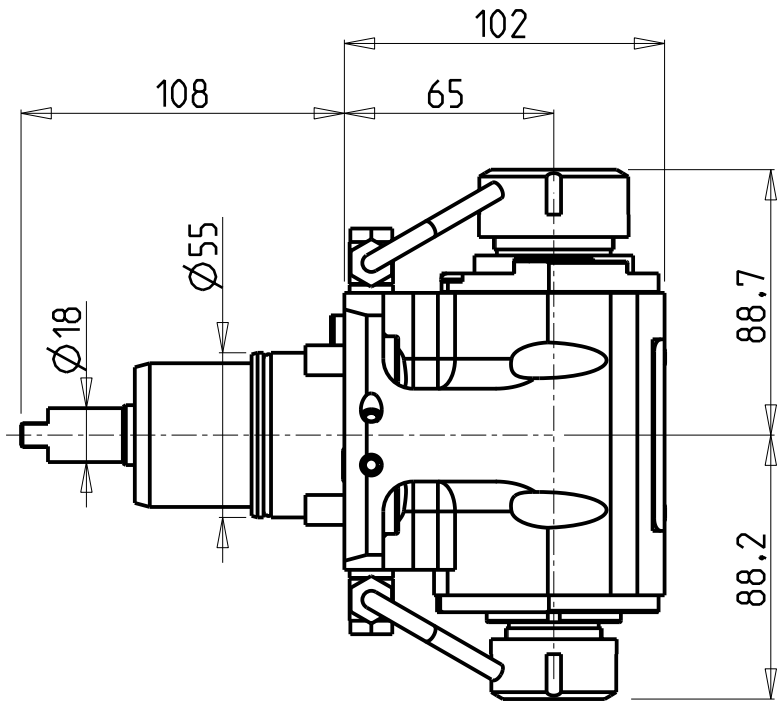

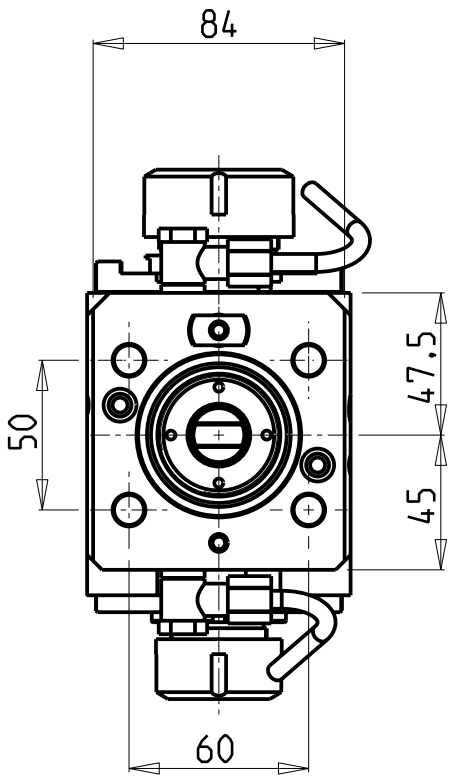

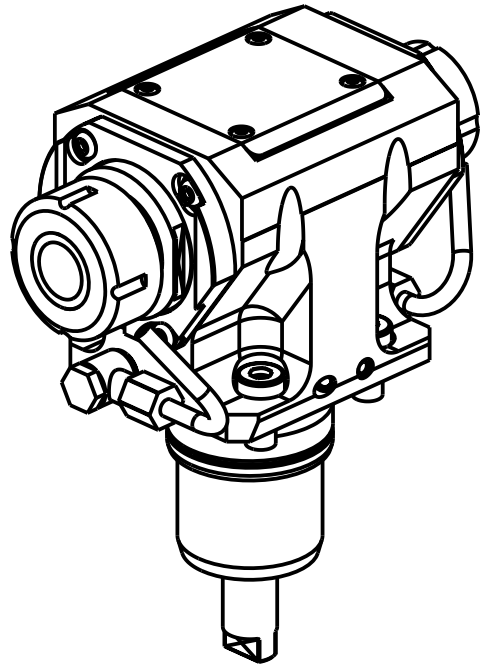

Cod. MT	Mandrino Spindle Spindel	I	RPM	Coppia Max Max Torque Max Drehmoment	Reversibile lato mandrino/contromandrino Reversible sub/main spindle side Umkehrbare Spindelseite/ Gegenspindelseite	Lubrificazione est. Ext. coolant Aussenkuehlung	CHIAVI NON INCLUSE Keys not included Schluessel nicht einbegriffen		
NKM2073225	ER32+ER25	1:1	12000	50Nm	X	X	CHSTER32	CHSTER25	OKU0650004 ▪

▪ Chiave inclusa
▪ Key included
▪ Schluessel inbegriffen

CMZ

MOD: TTL 52 - TTL 66 - TA15-20-25-30M/Y/MS/MY/YS 15 ST.

MODULO MOTORIZZATO ASSIALE BISPORGENTE 12000 RPM H=65mm
Axial opposite face twin driven tool 12000 rpm H=65mm
Axial angetriebenes Werkzeug halb vorspringend 12000 rpm H=65mm

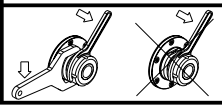

M.T. srl
Via Casino Albini 480
Tel. 0541/956034-957884
Fax 0541/956341
47842 S. GIOVANNI IN M. (RN)
e-mail: mtma@mtmarchetti.com
http://www.mtmarchetti.com

Subject to change without notice.

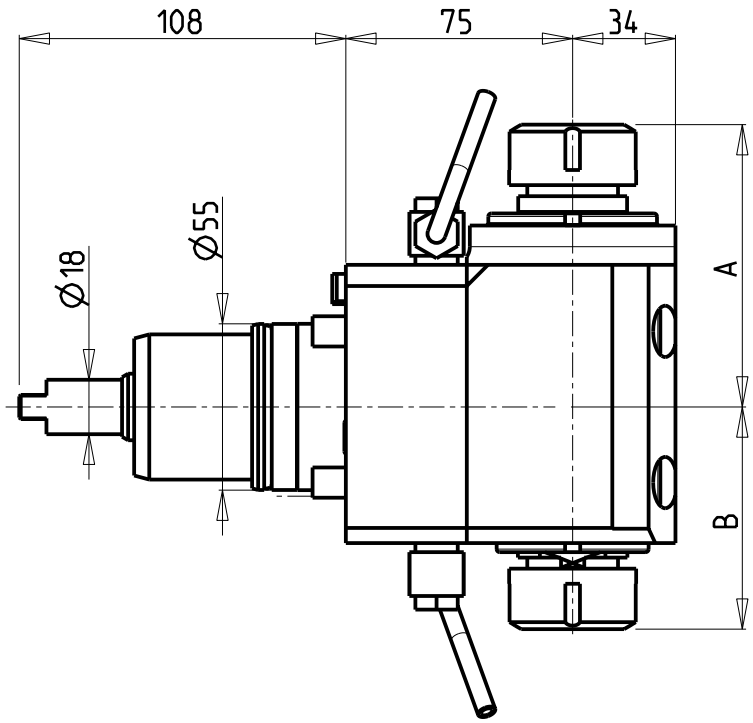

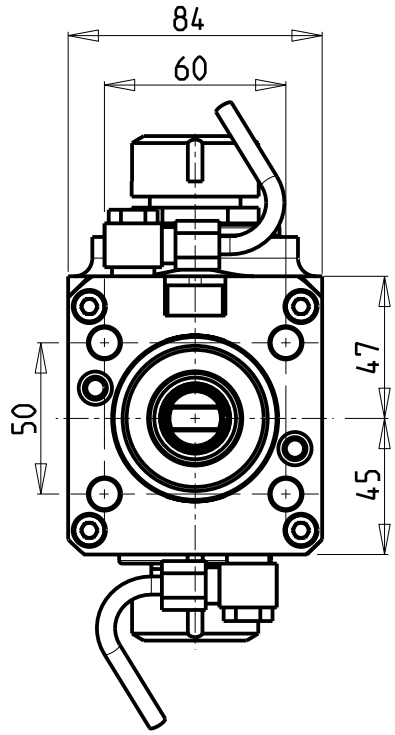

ATTENZIONE - ATTENTION - ACHTUNG

- Per lo smontaggio degli utensili utilizzare sempre la chiave di contrasto come indicato nel manuale d'uso.
- For disassembly of the tools use always the contrast key as mentioned in the user instructions.
- Fuer das Abmontieren der Werkzeuge immer den Gegenschluessel benutzen wie in der Bedienungsanleitung erwaehnt.

ATTENZIONE - ATTENTION - ACHTUNG

- VERIFICARE LE MISURE DI INGOMBRO PER POSSIBILE INTERFERENZA SU ALCUNI MODELLI DI MACCHINE
- Please check the overall sizes for possible interferences on some machine models
- Bitte überprüfen sie das ausmass um mögliche interferenzen auf einigen maschinen modellen zu vermeiden

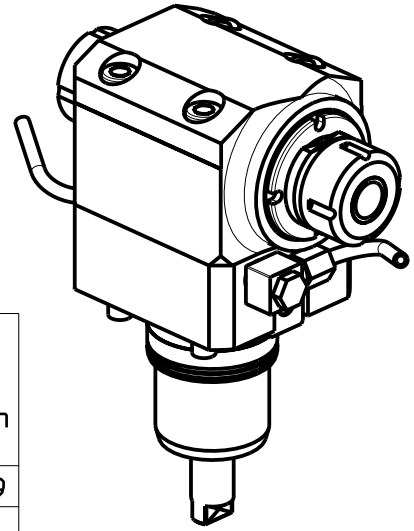

Cod. MT	Mandrino Spindle Spindel	I	RPM	Coppia Max Max Torque Max Drehmoment	Reversibile lato mandrino/contromandrino Reversible sub/main spindle side Umkehrbare Spindelseite/ Gegenspindelseite	Lubrificazione est. Ext. coolant Aussenkuehlung	A	B	CHIAVI NON INCLUSE Keys not included Schluessel nicht einbegriffen	
NKM0502525	ER25+ER25	1:1	6000	50Nm	X	X	93.36	73.46	CHSTER25	CHUB36+CHUB29
NKM0503232	ER32+ER32	1:1	6000	50Nm	X	X	100.56	78.96	CHSTER32	CHUB36

CMZ

MOD: TX52 Y3/Y2 QUATTRO/Y2 TWIN - TX66 Y3/Y2 QUATTRO/Y2 TWIN - TTL 52 - TTL 66
TA15-20-25-30M/Y/MS/MY/YS 15 ST.

MODULO MOTORIZZATO ASSIALE BISPORGENTE H=75mm
Axial opposite face twin driven tool H=75mm
Axial angetriebenes Werkzeug halb vorspringend H=75mm

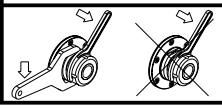

M.T. srl
Via Casino Albini 480
Tel. 0541/956034-957884
Fax 0541/956341
47842 S. GIOVANNI IN M. (RN)
e-mail: mtma@mtmarchetti.com
http://www.mtmarchetti.com

Subject to change without notice.

ATTENZIONE - ATTENTION - ACHTUNG

- VERIFICARE LE MISURE DI INGOMBRO PER POSSIBILE INTERFERENZA SU ALCUNI MODELLI DI MACCHINE
- Please check the overall sizes for possible interferences on some machine models
- Bitte überpräfen sie das ausmass um mögliche interferenzen auf einigen maschinen modellen zu vermeiden

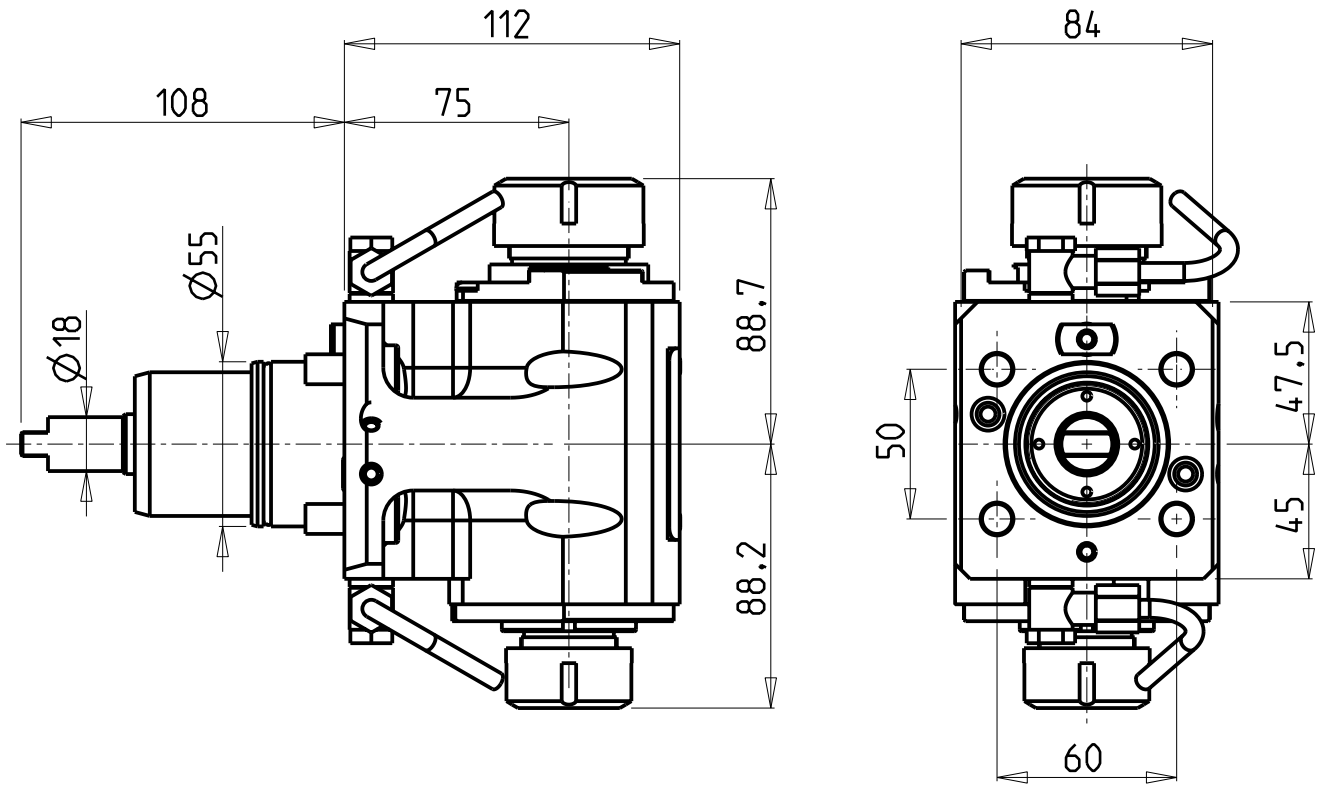

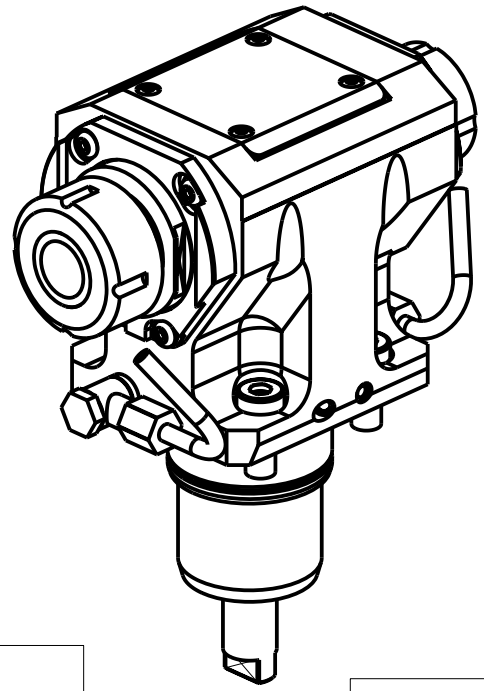

Cod. MT	Mandrino Spindle Spindel	I	RPM	Coppia Max Max Torque Max Drehmoment	Reversibile lato mandrino/contromandrino Reversible sub/main spindle side Umkehrbare Spindelseite/ Gegenspindelseite	Lubrificazione est. Ext. coolant Aussenkuehlung	CHIAVI NON INCLUSE Keys not included Schluessel nicht einbegriffen		
NKM1403225	ER32+ER25	1:1	6000	50Nm	X	X	CHSTER32	CHSTER25	OKU0650004 ▪

- ▪ Chiave inclusa
- ▪ Key included
- ▪ Schluessel inbegriffen

CMZ
MOD: TX52 Y3/Y2 QUATTRO/Y2 TWIN - TX66 Y3/Y2 QUATTRO/Y2 TWIN - TTL 52 - TTL 66
TA15-20-25-30M/Y/MS/MY/YS 15 ST.

MODULO MOTORIZZATO ASSIALE BISPORGENTE H=75mm
Axial opposite face twin driven tool H=75mm
Axial angetriebenes Werkzeug halb vorspringend H=75mm

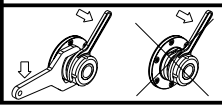

M.T. srl
Via Casino Albini 480
Tel. 0541/956034-957884
Fax 0541/956341
47842 S. GIOVANNI IN M. (RN)
e-mail: mtma@mtmarchetti.com
http://www.mtmarchetti.com

PAGINA CMZ240-3-21

Subject to change without notice.

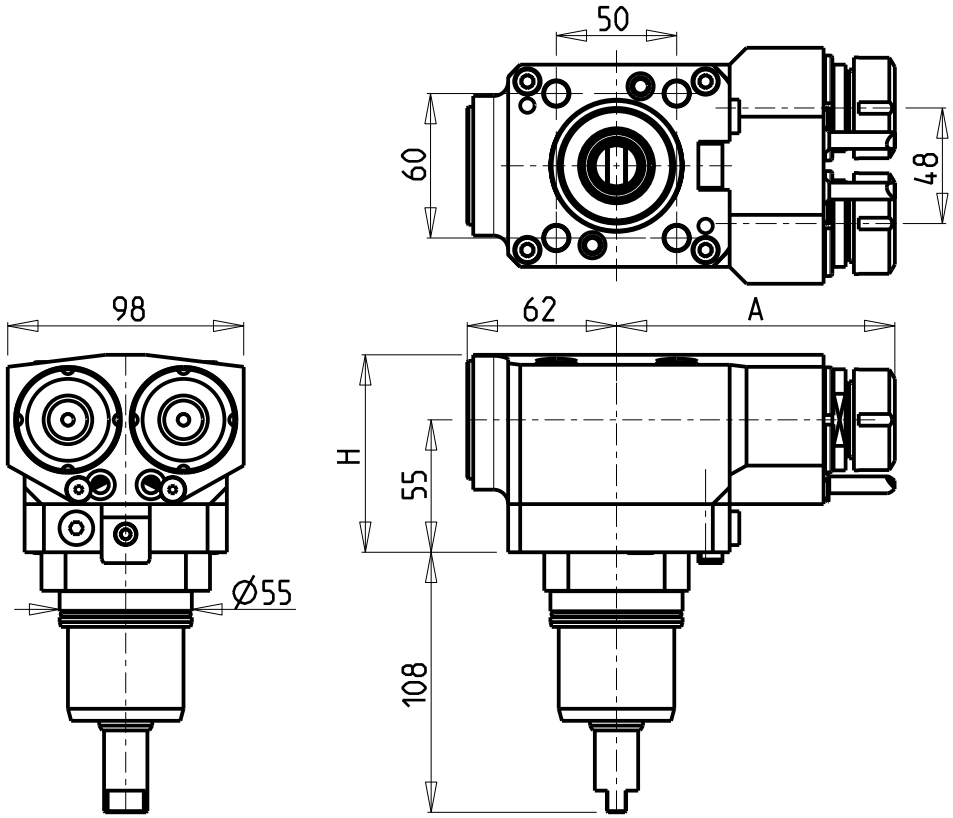

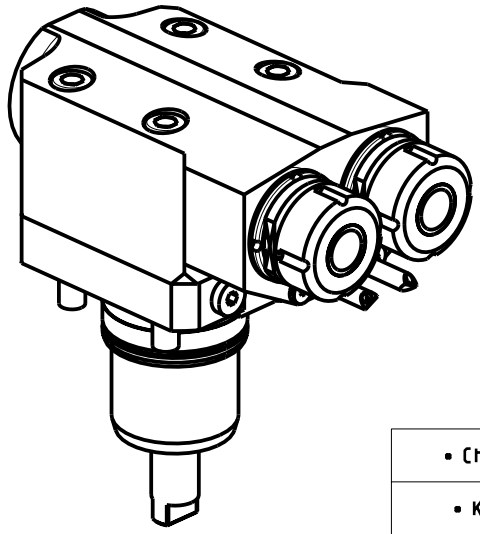

ATTENZIONE - ATTENTION - ACHTUNG

- Per lo smontaggio degli utensili utilizzare sempre la chiave di contrasto come indicato nel manuale d'uso.
- For disassembly of the tools use always the contrast key as mentioned in the user instructions.
- Fuer das Abmontieren der Werkzeuge immer den Gegenschluessel benutzen wie in der Bedienungsanleitung erwaehnt.

NKM0130216

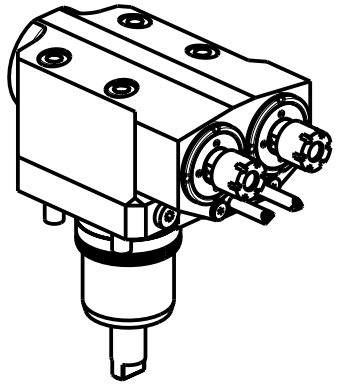

- Chiave inclusa
- Key included
- Schluessel inbegriffen

Cod. MT	Mandrino Spindle Spindel	I	RPM	Coppia Max Max Torque Max Drehmoment	Reversibile lato mandrino/contromandrino Reversible sub/main spindle side Umkehrbare Spindelseite/ Gegenspindelseite	Lubrificazione int. Coolant through Innenkuehlung	Lubrificazione est. Ext. coolant Aussenkuehlung	A	H	CHIAVI NON INCLUSE Keys not included Schluessel nicht einbegriffen		
NKM0130216	ER16	1:1	6000	30Nm	X	-	X	115.15	82	CHUB17	CHMNER16	
NKM0130520	ERA20	1:1	6000	30Nm	X	P=70bar	X	116.15	87	MNL0210007	CHUB22	CHTAER20ZC•
NKM0130225	ER25	1:1	6000	30Nm	X	-	X	115.61	82	MNL0210007	CHSTER25	
NKM0130425	ER25	1:1	6000	30Nm	X	P=70bar	X	128.11	87	MNL0210007	CHSTER25	

CMZ

MOD: TX52 Y3/Y2 QUATTRO/Y2 TWIN - TX66 Y3/Y2 QUATTRO/Y2 TWIN - TTL 52 - TTL 66
TA15-20-25-30M/Y/MS/MY/YS 15 ST.

MODULO MOTORIZZATO ASSIALE 2 USCITE IN Y H=55mm
Axial single side twin head driven tool in Y H=55mm
Axial angetriebenes Werkzeug 2 Ausgaenge in Y H=55mm

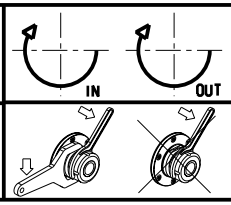

M.T. srl
Via Casino Albini 480
Tel. 0541/956034-957884
Fax 0541/956341
47842 S. GIOVANNI IN M. (RN)
e-mail: mtma@mtmarchetti.com
http://www.mtmarchetti.com

MT®

Subject to change without notice.

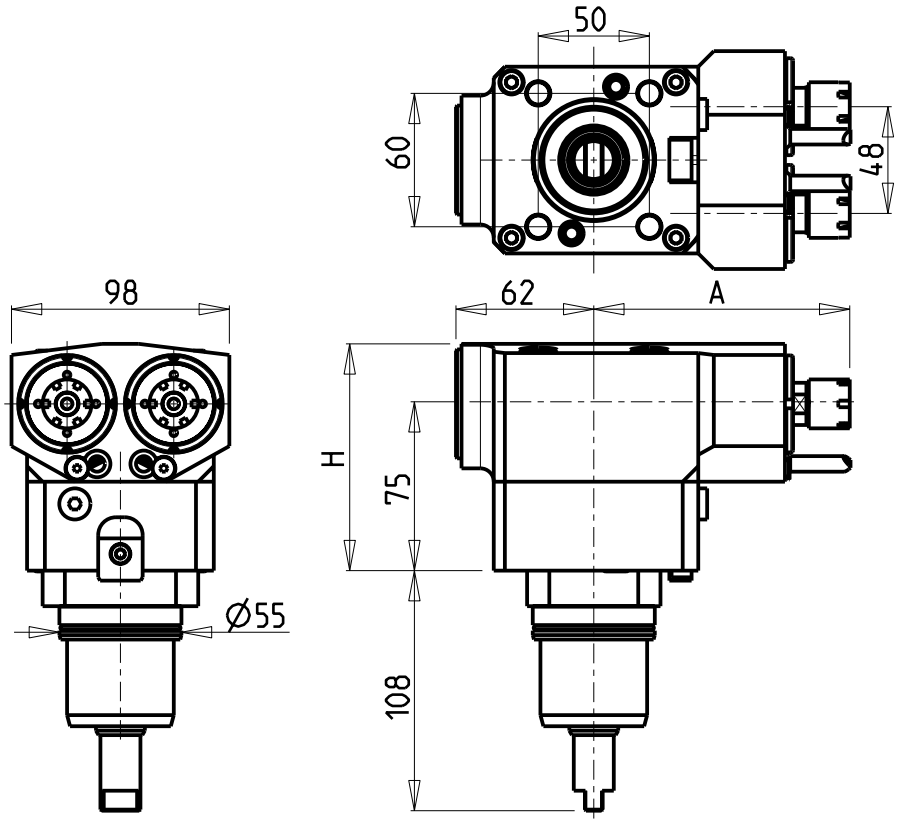

ATTENZIONE - ATTENTION - ACHTUNG

- VERIFICARE LE MISURE DI INGOMBRO PER POSSIBILE INTERFERENZA SU ALCUNI MODELLI DI MACCHINE
- Please check the overall sizes for possible interferences on some machine models
- Bitte überprüfen sie das ausmass um mögliche interferenzen auf einigen maschinen modellen zu vermeiden

ATTENZIONE - ATTENTION - ACHTUNG

- Per lo smontaggio degli utensili utilizzare sempre la chiave di contrasto come indicato nel manuale d'uso.
- For disassembly of the tools use always the contrast key as mentioned in the user instructions.
- Fuer das Abmontieren der Werkzeuge immer den Gegenschluessel benutzen wie in der Bedienungsanleitung erwaehnt.

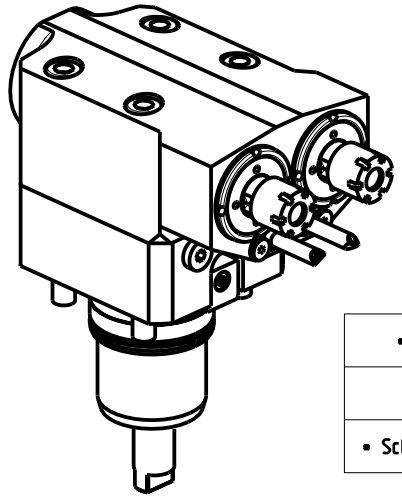

NKM0131225

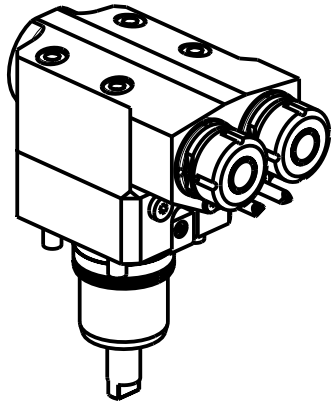

- Chiave inclusa
- Key included
- Schluessel inbegriffen

Cod. MT	Mandrino Spindle Spindel	I	RPM	Coppia Max Max Torque Max Drehmoment	Reversibile lato mandrino/contromandrino Reversible sub/main spindle side Umkehrbare Spindelseite/ Gegenspindelseite	Lubrificazione int. Coolant through Innenkuehlung	Lubrificazione est. Ext. coolant Aussenkuehlung	A	H	CHIAVI NON INCLUSE Keys not included Schluessel nicht einbegriffen		
NKM0131216	ER16	1:1	6000	30Nm	X	-	X	115.15	102	CHUB17	CHMNER16	
NKM0131520	ERA20	1:1	6000	30Nm	X	P=70bar	X	116.15	107	MNL0210007	CHUB22	CHTAER20ZC•
NKM0131225	ER25	1:1	6000	30Nm	X	-	X	115.61	102	MNL0210007	CHSTER25	
NKM0131425	ER25	1:1	6000	30Nm	X	P=70bar	X	128.11	107	MNL0210007	CHSTER25	

CMZ

MOD: TX52 Y3/Y2 QUATTRO/Y2 TWIN - TX66 Y3/Y2 QUATTRO/Y2 TWIN - TTL 52 - TTL 66
TA15-20-25-30M/Y/MS/MY/YS 15 ST.

MODULO MOTORIZZATO ASSIALE 2 USCITE IN Y H=75mm
Axial single side twin head driven tool in Y H=75mm
Axial angetriebenes Werkzeug 2 Ausgaenge in Y H=75mm

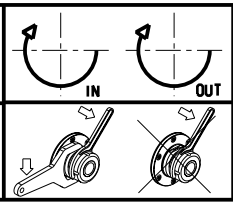

M.T. srl
Via Casino Albini 480
Tel. 0541/956034-957884
Fax 0541/956341
47842 S. GIOVANNI IN M. (RN)
e-mail: mtma@mtmarchetti.com
http://www.mtmarchetti.com

Subject to change without notice.

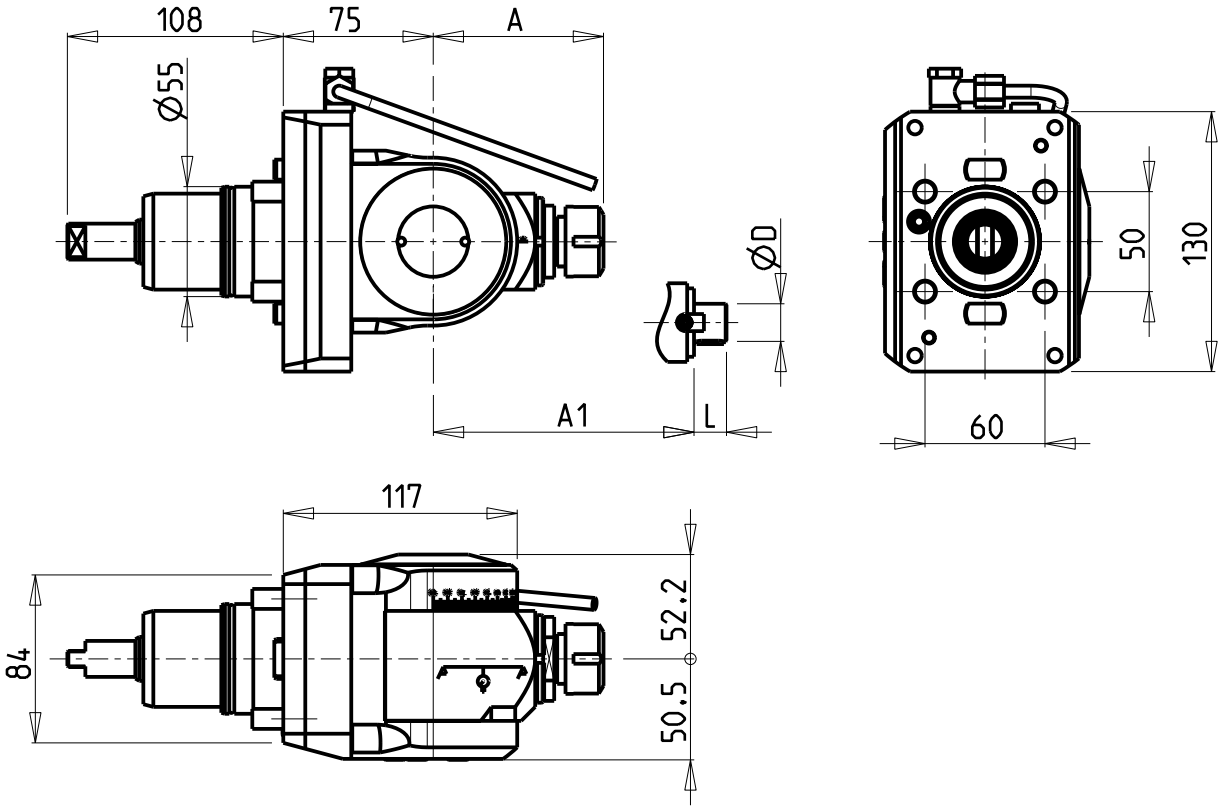

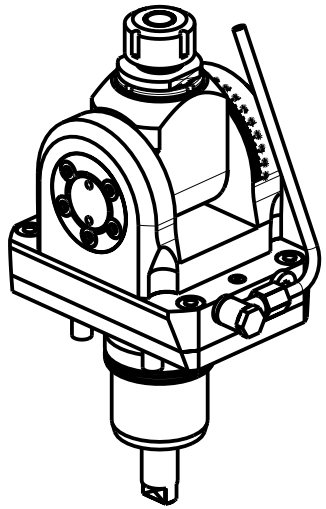

ATTENZIONE - ATTENTION - ACHTUNG

- Per lo smontaggio degli utensili utilizzare sempre la chiave di contrasto come indicato nel manuale d'uso.
- For disassembly of the tools use always the contrast key as mentioned in the user instructions.
- Fuer das Abmontieren der Werkzeuge immer den Gegenschluessel benutzen wie in der Bedienungsanleitung erwaehnt.

ATTENZIONE - ATTENTION - ACHTUNG

- Verificare la tabella sottostante per possibile interferenza su alcuni modelli di macchine
- Please check the table below for possible interferences on some machine models
- Die untenstehende tabelle unbedingt auf eventuelle interferenzen auf eingen maschinen modellen überprüfen

Cod. MT	Mandrino Spindle Spindel	I	RPM	Coppia Max Max Torque Max Drehmoment	Lubrificazione est. Ext. coolant Aussenkuehlung	A	A1	D	L	CHIAVI INCLUSE Keys included Schluessel inbegriffen			
NKM1260120	ER20	1:1	6000	40Nm	X	85.16	-	-	-	CHSTER20	CHUB36	CHESL06	CHESL07
NKM1260125	ER25	1:1	6000	40Nm	X	86.16	-	-	-	CHSTER25	CHUB36	CHESL06	CHESL07
NKM1260516	Ø16x17	1:1	6000	40Nm	X	-	65	16	17	CH_VTCROCE_M08	CHUB36	CHESL06	CHESL07
NKM1260522	Ø22x19	1:1	6000	40Nm	X	-	66	22	19	CH_VTCROCE_M10	CHUB36	CHESL06	CHESL07
NKM1260519	Ø3/4"x3/4"	1:1	6000	40Nm	X	-	65	3/4"	3/4"	CH_VTCROCE_M08	CHUB36	CHESL06	CHESL07

CMZ

MOD: TX52 Y3/Y2 QUATTRO/Y2 TWIN - TX66 Y3/Y2 QUATTRO/Y2 TWIN - TTL 52 - TTL 66

MODULO MOTORIZZATO ORIENTABILE ±90°
±90° adjustable angle driven tool
Angetriebenes Werkzeug schwenkbar ±90°

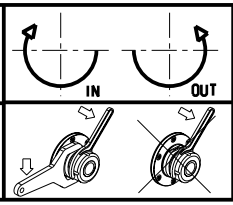

M.T. srl
Via Casino Albini 480
Tel. 0541/956034-957884
Fax 0541/956341
47842 S. GIOVANNI IN M. (RN)
e-mail: mtma@mtmarchetti.com
http://www.mtmarchetti.com

MT®

Subject to change without notice.

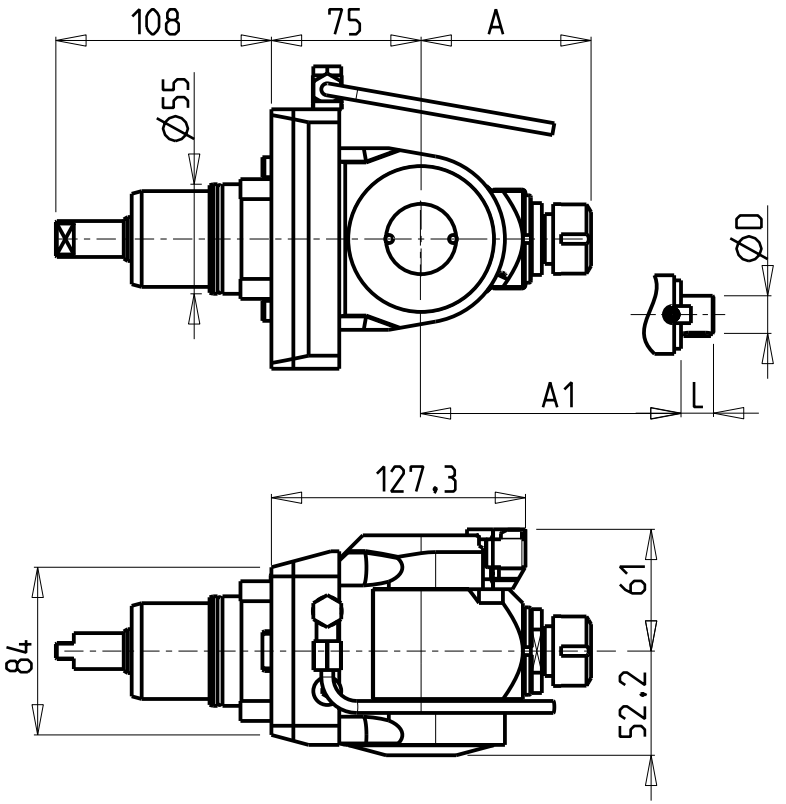

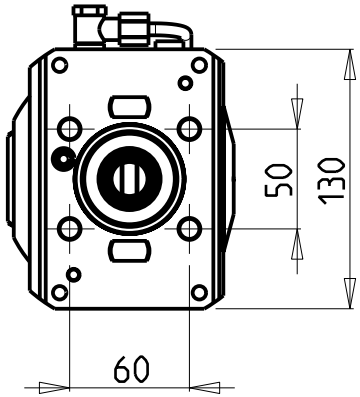

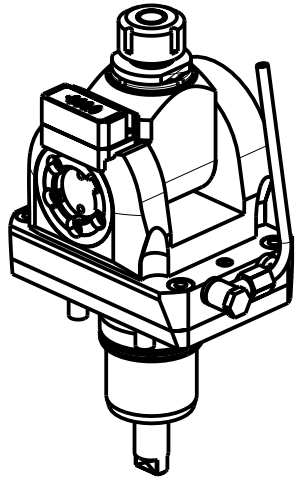

ATTENZIONE - ATTENTION - ACHTUNG

- Per lo smontaggio degli utensili utilizzare sempre la chiave di contrasto come indicato nel manuale d'uso.
- For disassembly of the tools use always the contrast key as mentioned in the user instructions.
- Fuer das Abmontieren der Werkzeuge immer den Gegenschluessel benutzen wie in der Bedienungsanleitung erwaehnt.

ATTENZIONE - ATTENTION - ACHTUNG

- Verificare la tabella sottostante per possibile interferenza su alcuni modelli di macchine
- Please check the table below for possible interferences on some machine models
- Die untenstehende tabelle unbedingt auf eventuelle interferenzen auf eingen maschinen modellen überprüfen

Cod. MT	Mandrino Spindle Spindel	I	RPM	Coppia Max Max Torque Max Drehmoment	Lubrificazione est. Ext. coolant Aussenkuehlung	A	A1	D	L	CHIAVI INCLUSE Keys included Schluessel inbegriffen			
NKM1220120	ER20	1:1	6000	40Nm	X	85.16	-	-	-	CHSTER20	CHUB36	CHESL06	CHESL07
NKM1220125	ER25	1:1	6000	40Nm	X	86.16	-	-	-	CHSTER25	CHUB36	CHESL06	CHESL07
NKM1220516	Ø16x17	1:1	6000	40Nm	X	-	65	16	17	CH_VTCROCE_M08	CHUB36	CHESL06	CHESL07
NKM1220522	Ø22x19	1:1	6000	40Nm	X	-	66	22	19	CH_VTCROCE_M10	CHUB36	CHESL06	CHESL07
NKM1220519	Ø3/4"x3/4"	1:1	6000	40Nm	X	-	65	3/4"	3/4"	CH_VTCROCE_M08	CHUB36	CHESL06	CHESL07

CMZ

MOD: TX52 Y3/Y2 QUATTRO/Y2 TWIN - TX66 Y3/Y2 QUATTRO/Y2 TWIN - TTL 52 - TTL 66

MODULO MOTORIZZATO ORIENTABILE ±90° CON NONIO DIGITALE
±90° adjustable angle driven tool with digital display
Angetriebenes Werkzeug schwenkbar ±90° mit digital display

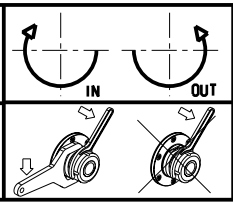

M.T. srl
Via Casino Albini 480
Tel. 0541/956034-957884
Fax 0541/956341
47842 S. GIOVANNI IN M. (RN)
e-mail: mtma@mtmarchetti.com
http://www.mtmarchetti.com

MT®

Subject to change without notice.

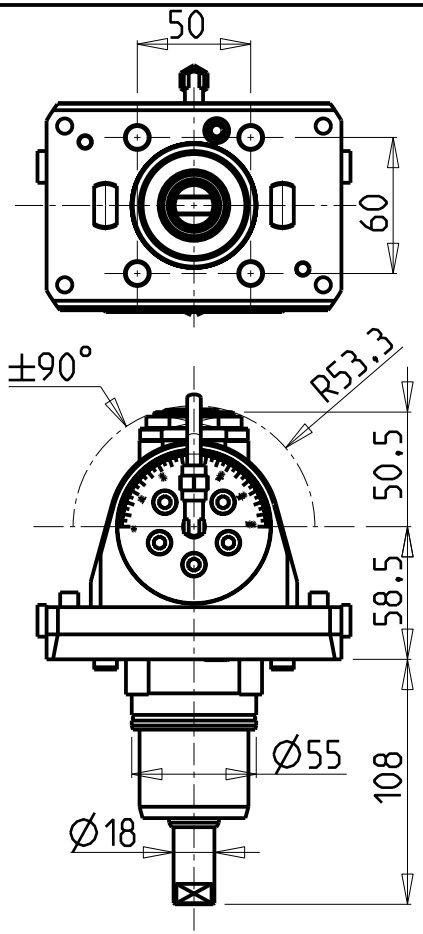

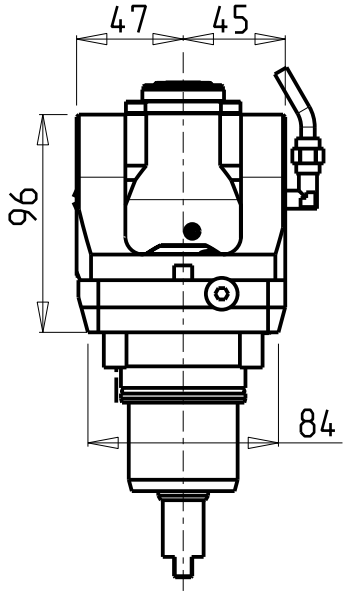

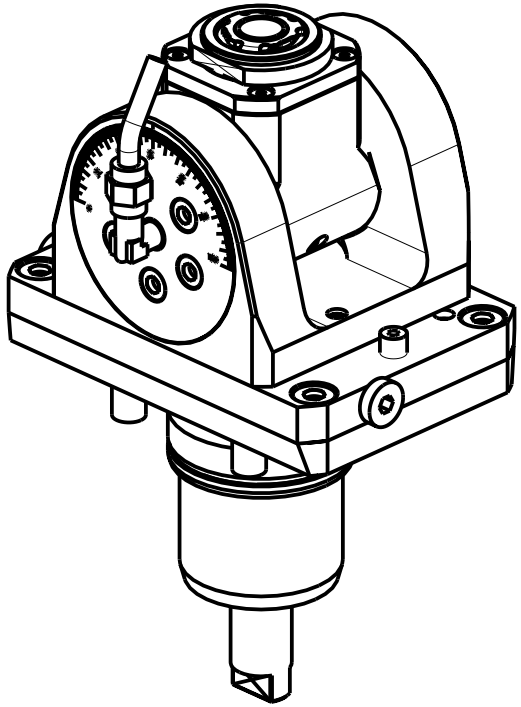

ATTENZIONE - ATTENTION - ACHTUNG

- Per lo smontaggio degli utensili utilizzare sempre la chiave di contrasto come indicato nel manuale d'uso.
- For disassembly of the tools use always the contrast key as mentioned in the user instructions.
- Fuer das Abmontieren der Werkzeuge immer den Gegenschluessel benutzen wie in der Bedienungsanleitung erwaehnt.

ATTENZIONE - ATTENTION - ACHTUNG

- Verificare la tabella sottostante per possibile interferenza su alcuni modelli di macchine
- Please check the table below for possible interferences on some machine models
- Die untenstehende tabelle unbedingt auf eventuelle interferenzen auf eingen maschinen modellen überprüfen

Cod. MT	Mandrino Spindle Spindel	I	RPM	Coppia Max Max Torque Max Drehmoment	Lubr.interna Coolant through Innenkuehlung	Lubrificazione est. Ext. coolant Aussenkuhlung	CHIAVI INCLUSE Keys included Schluessel inbegriffen				
NKM0790120	ERA20	1:1	6000	30Nm		X	CHUB22	CHUB36	CHESL05	CHESL07	CHTAER20ZC
NKM0790220	ERA20	1:1	6000	30Nm	P=70bar	X	CHUB22	CHUB36	CHESL05	CHESL07	CHTAER20ZC

CMZ

MOD: TX52 Y3/Y2 QUATTRO/Y2 TWIN - TX66 Y3/Y2 QUATTRO/Y2 TWIN - TTL 52 - TTL 66
TA15-20-25-30M/Y/MS/MY/YS 15 ST.

MODULO MOTORIZZATO ORIENTABILE ±90°
±90° adjustable angle driven tool
Angetriebenes Werkzeug schwenkbar ±90°

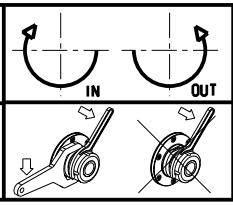

M.T. srl
Via Casino Albini 480
Tel. 0541/956034-957884
Fax 0541/956341
47842 S. GIOVANNI IN M. (RN)
e-mail: mtma@mtmarchetti.com
http://www.mtmarchetti.com

MT®

PAGINA CMZ335-3-00

Subject to change without notice.

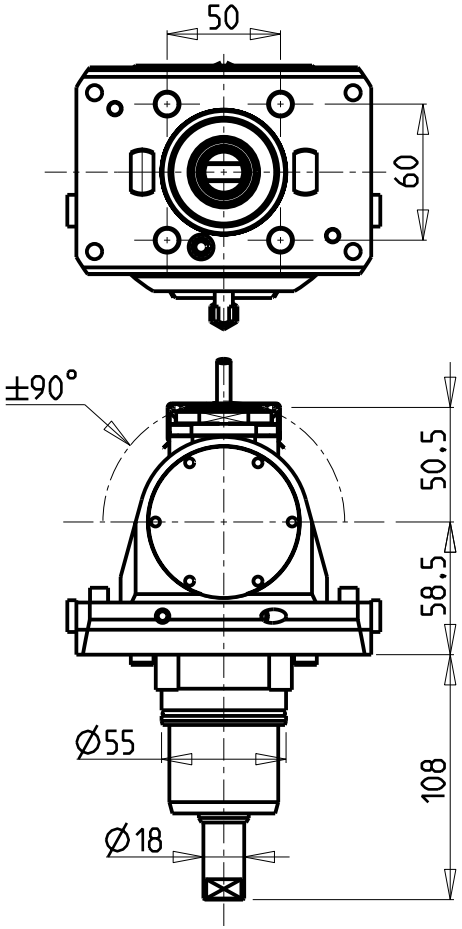

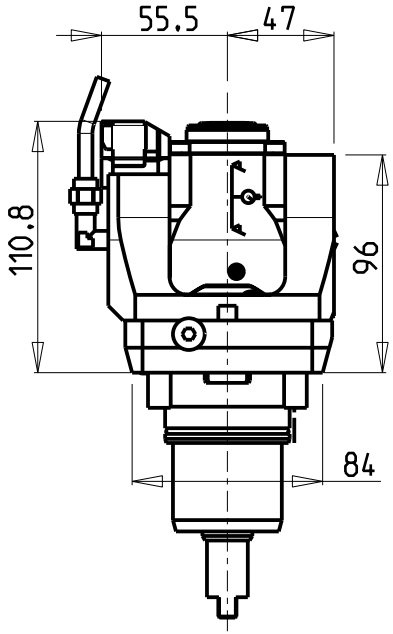

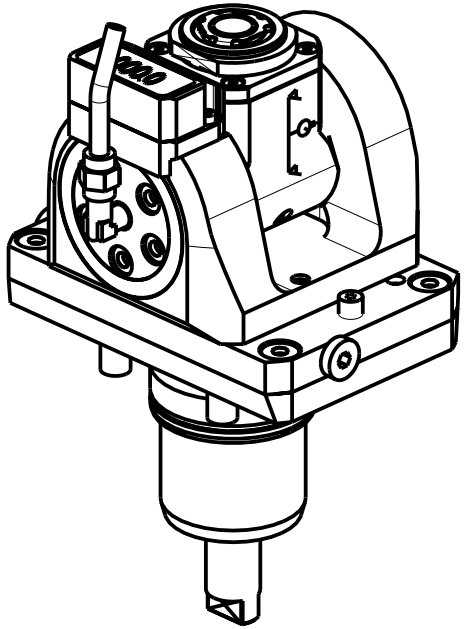

ATTENZIONE - ATTENTION - ACHTUNG

- Per lo smontaggio degli utensili utilizzare sempre la chiave di contrasto come indicato nel manuale d'uso.
- For disassembly of the tools use always the contrast key as mentioned in the user instructions.
- Fuer das Abmontieren der Werkzeuge immer den Gegenschluessel benutzen wie in der Bedienungsanleitung erwaehnt.

ATTENZIONE - ATTENTION - ACHTUNG

- Verificare la tabella sottostante per possibile interferenza su alcuni modelli di macchine
- Please check the table below for possible interferences on some machine models
- Die untenstehende tabelle unbedingt auf eventuelle interferenzen auf eingen maschinen modellen überprüfen

Cod. MT	Mandrino Spindle Spindel	I	RPM	Coppia Max Max Torque Max Drehmoment	Lubr.interna Coolant through Innenkuehlung	Lubrificazione est. Ext. coolant Aussenkuhlung	CHIAVI INCLUSE Keys included Schluessel inbegriffen				
NKM0795120	ERA20	1:1	6000	30Nm	-	X	CHUB22	CHUB36	CHESL05	CHESL07	CHTAER20ZC
NKM0795220	ERA20	1:1	6000	30Nm	P=70bar	X	CHUB22	CHUB36	CHESL05	CHESL07	CHTAER20ZC

CMZ

MOD: TX52 Y3/Y2 QUATTRO/Y2 TWIN - TX66 Y3/Y2 QUATTRO/Y2 TWIN - TTL 52 - TTL 66
TA15-20-25-30M/Y/MS/MY/YS 15 ST.

MODULO MOTORIZZATO ORIENTABILE ±90° CON NONIO DIGITALE
±90° adjustable angle driven tool with digital display
Angetriebenes Werkzeug schwenkbar ±90° mit digital display

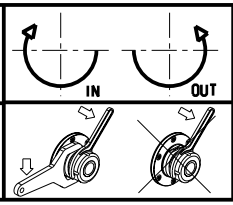

M.T. srl
Via Casino Albini 480
Tel. 0541/956034-957884
Fax 0541/956341
47842 S. GIOVANNI IN M. (RN)
e-mail: mtma@mtmarchetti.com
http://www.mtmarchetti.com

MT®

Subject to change without notice.

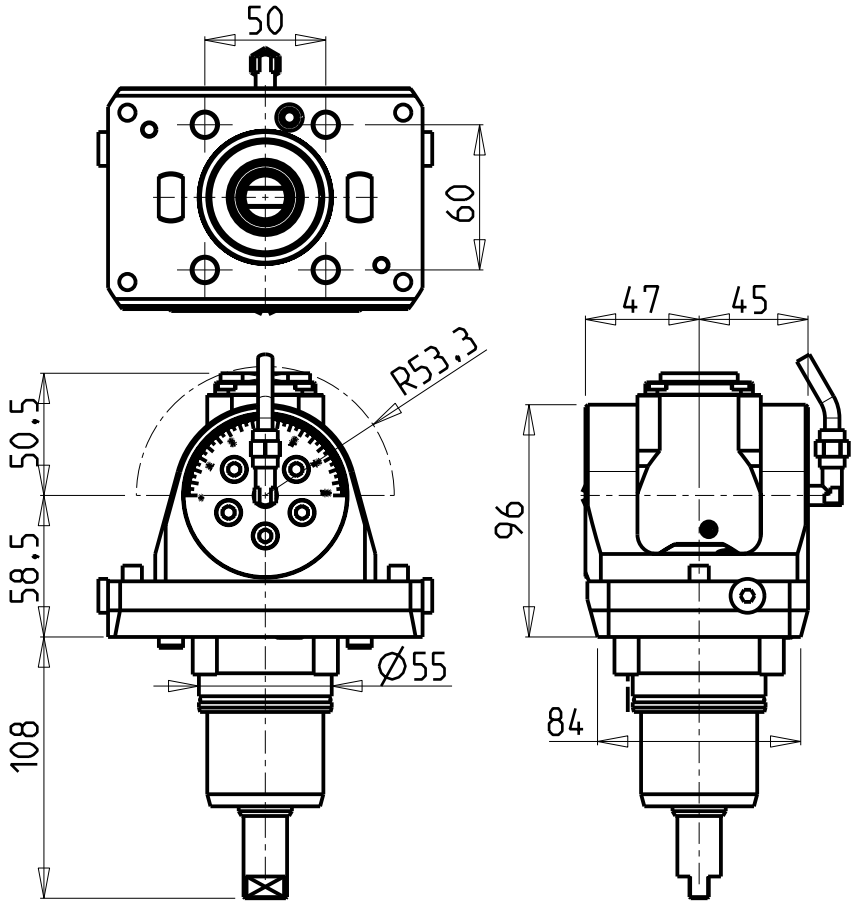

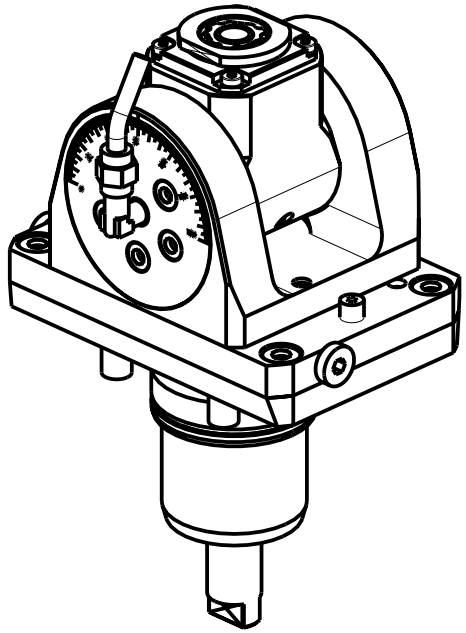

ATTENZIONE - ATTENTION - ACHTUNG

- Per lo smontaggio degli utensili utilizzare sempre la chiave di contrasto come indicato nel manuale d'uso.
- For disassembly of the tools use always the contrast key as mentioned in the user instructions.
- Fuer das Abmontieren der Werkzeuge immer den Gegenschluessel benutzen wie in der Bedienungsanleitung erwaehnt.

ATTENZIONE - ATTENTION - ACHTUNG

- Verificare la tabella sottostante per possibile interferenza su alcuni modelli di macchine
- Please check the table below for possible interferences on some machine models
- Die untenstehende tabelle unbedingt auf eventuelle interferenzen auf eingen maschinen modellen überprüfen

Cod. MT	Mandrino Spindle Spindel	I	RPM	Coppia Max Max Torque Max Drehmoment	Lubr.interna Coolant through Innenkuehlung	Lubrificazione est. Ext. coolant Aussenkuhlung	CHIAVI INCLUSE Keys included Schluessel inbegriffen				
NKM0790316	ERA16	1:2	12000	8Nm		X	CHUB19_SP3	CHUB32	CHESL05	CHESL07	CHTAER16ZC
NKM0790416	ERA16	1:2	12000	8Nm	P=70bar	X	CHUB19_SP3	CHUB32	CHESL05	CHESL07	CHTAER16ZC

CMZ

MOD: TX52 Y3/Y2 QUATTRO/Y2 TWIN - TX66 Y3/Y2 QUATTRO/Y2 TWIN - TTL 52 - TTL 66
TA15-20-25-30M/Y/MS/MY/YS 15 ST.

MODULO MOTORIZZATO ORIENTABILE +/-90° MOLTIPLICATO I=1:2
+/-90° adjustable angle driven tool geared-up I=1:2
Angetriebenes Werkzeug schwenkbar +/-90° uebersetzt I=1:2

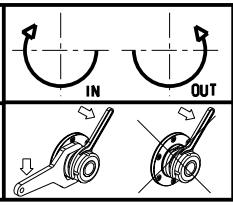

M.T. srl
Via Casino Albini 480
Tel. 0541/956034-957884
Fax 0541/956341
47842 S. GIOVANNI IN M. (RN)
e-mail: mtma@mtmarchetti.com
http://www.mtmarchetti.com

PAGINA CMZ336-3-00

Subject to change without notice.

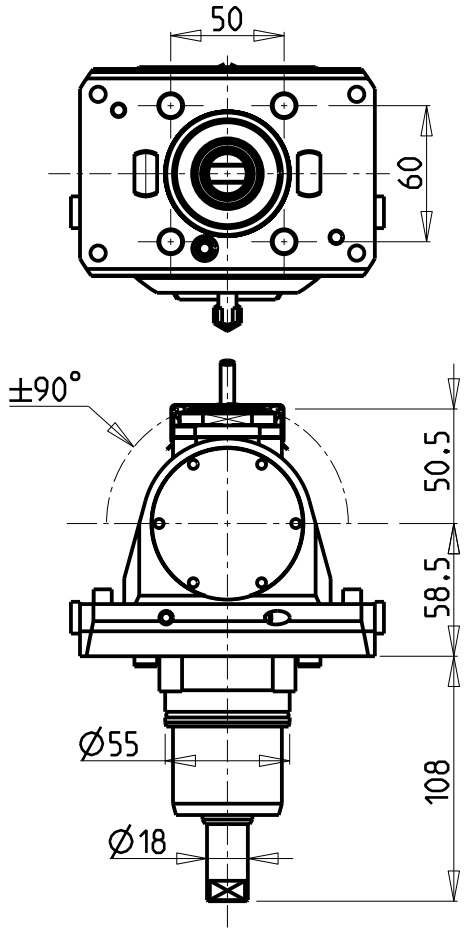

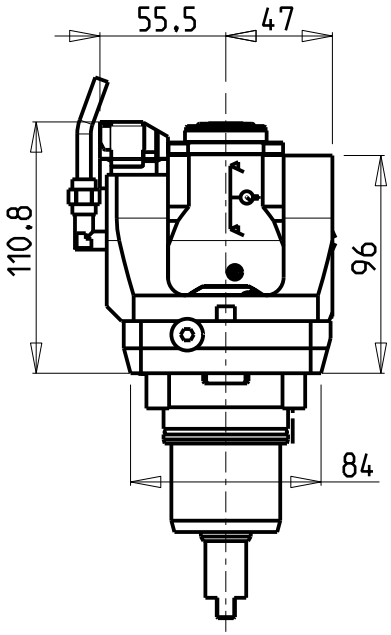

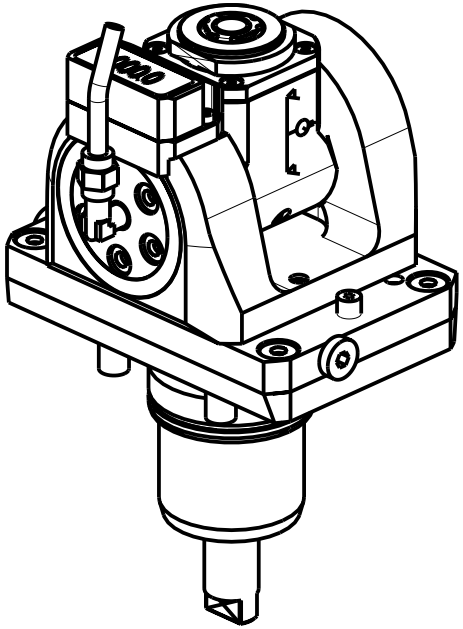

ATTENZIONE - ATTENTION - ACHTUNG

- Per lo smontaggio degli utensili utilizzare sempre la chiave di contrasto come indicato nel manuale d'uso.
- For disassembly of the tools use always the contrast key as mentioned in the user instructions.
- Fuer das Abmontieren der Werkzeuge immer den Gegenschluessel benutzen wie in der Bedienungsanleitung erwaehnt.

ATTENZIONE - ATTENTION - ACHTUNG

- Verificare la tabella sottostante per possibile interferenza su alcuni modelli di macchine
- Please check the table below for possible interferences on some machine models
- Die untenstehende tabelle unbedingt auf eventuelle interferenzen auf eingen maschinen modellen überprüfen

Cod. MT	Mandrino Spindle Spindel	I	RPM	Coppia Max Max Torque Max Drehmoment	Lubr.interna Coolant through Innenkuehlung	Lubrificazione est. Ext. coolant Aussenkuhlung	CHIAVI INCLUSE Keys included Schluessel inbegriffen				
NKM0795316	ERA16	1:2	12000	8Nm	-	X	CHUB19_SP3	CHUB32	CHESL05	CHESL07	CHTAER16ZC
NKM0795416	ERA16	1:2	12000	8Nm	P=70bar	X	CHUB19_SP3	CHUB32	CHESL05	CHESL07	CHTAER16ZC

CMZ

MOD: TX52 Y3/Y2 QUATTRO/Y2 TWIN - TX66 Y3/Y2 QUATTRO/Y2 TWIN - TTL 52 - TTL 66
TA15-20-25-30M/Y/MS/MY/YS 15 ST.

MODULO MOTORIZZATO ORIENTABILE +/-90° MOLTIPLICATO I=1:2 CON NONIO DIGITALE
+/-90° adjustable angle driven tool geared-up I=1:2 with digital display
Angetriebenes Werkzeug schwenkbar +/-90° uebersetzt I=1:2 mit digital display

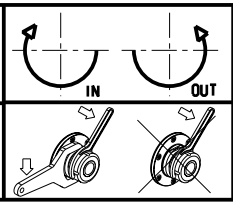

M.T. srl
Via Casino Albini 480
Tel. 0541/956034-957884
Fax 0541/956341
47842 S. GIOVANNI IN M. (RN)
e-mail: mtma@mtmarchetti.com
http://www.mtmarchetti.com

MT®

Subject to change without notice.

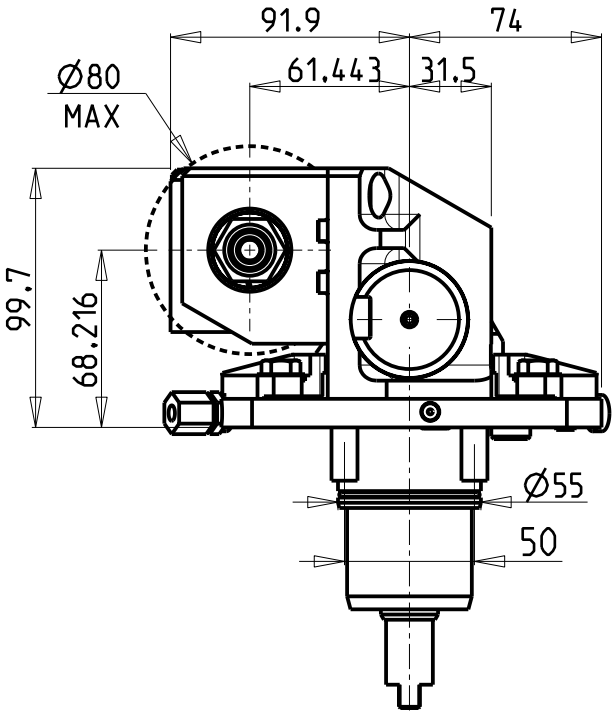

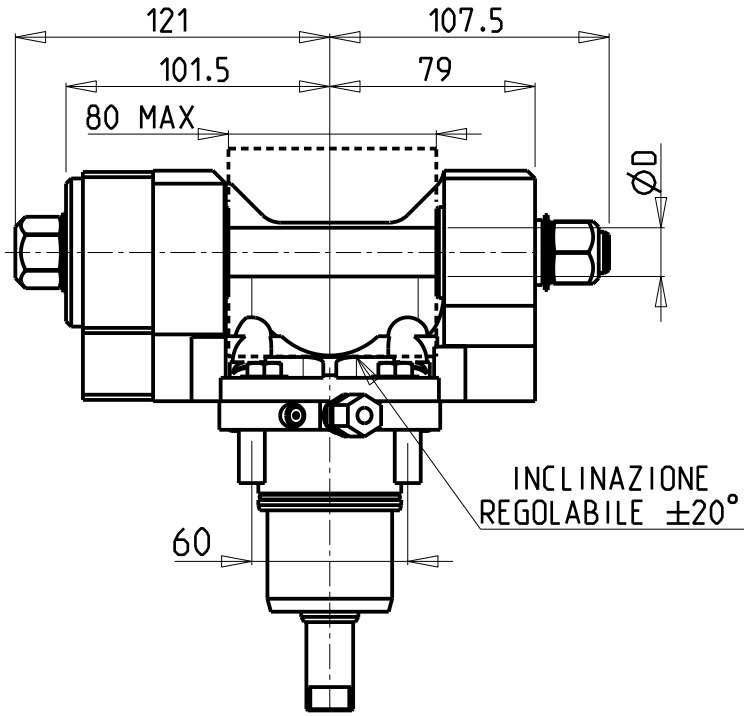

ATTENZIONE - ATTENTION - ACHTUNG

- VERIFICARE LE MISURE DI INGOMBRO PER POSSIBILE INTERFERENZA SU ALCUNI MODELLI DI MACCHINE
- Please check the overall sizes for possible interferences on some machine models
- Bitte überprüfen sie das ausmass um mögliche interferenzen auf einigen maschinen modellen zu vermeiden

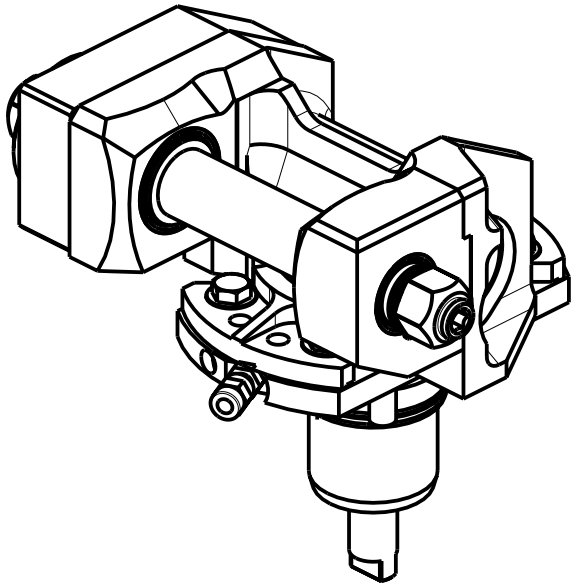

DOTAZIONI - SUPPLIED WITH - AUSSTATTUNG	
mm / inch	- N°1 ALBERO + DISTANZIALI - N°1 SHAFT + SPACER - N°1 DORN + ABSTANDSSTUECK

PER ALBERI E DISTANZIALI VEDI PAG. TBL250-1-00
FOR SHAFT END SPACER SEE PAGE TBL250-1-00
FUER DORN UND ABSTANDSSTUECK SEITE TBL250-1-00

Cod. MT	I	RPM max	Coppia Max Max Torque Max Drehmoment	Reversibile lato mandrino/contromandrino Reversible sub/main spindle side Umkehrbare Spindelseite/ Gegenspindelseite	Lubrificazione est. Ext. coolant Aussenkuehlung	D (mm)	D (Inch)	CHIAVI INCLUSE Keys included Schluessel inbegriffen			
NKM0081100	1:1	6000	60Nm	X	X	16-22-27-32	3/4"-1"-1 1/4"	CHUB13	CHUB24	CHESL08	CHESL07
NKM0082100	2:1	3000	80Nm	X	X	16-22-27-32	3/4"-1"-1 1/4"	CHUB13	CHUB24	CHESL08	CHESL07

CMZ
MOD: TX52 Y3/Y2 QUATTRO/Y2 TWIN - TX66 Y3/Y2 QUATTRO/Y2 TWIN - TTL 52 - TTL 66
TA15-20-25-30M/Y/MS/MY/YS 15 ST.

MODULO MOTORIZZATO PORTACREATORE
Driven gear hobber
Angetriebenes Zahnraedwalzfraes-Werkzeug

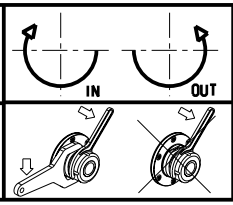

M.T. srl
Via Casino Albini 480
Tel. 0541/956034-957884
Fax 0541/956341
47842 S. GIOVANNI IN M. (RN)
e-mail: mtma@mtmarchetti.com
http://www.mtmarchetti.com

MT®

Subject to change without notice.

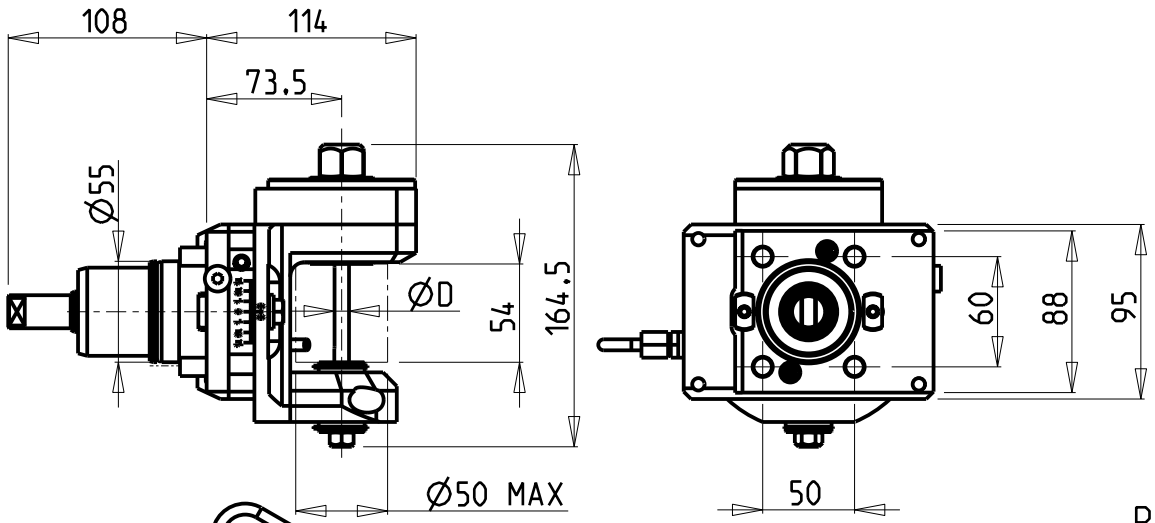

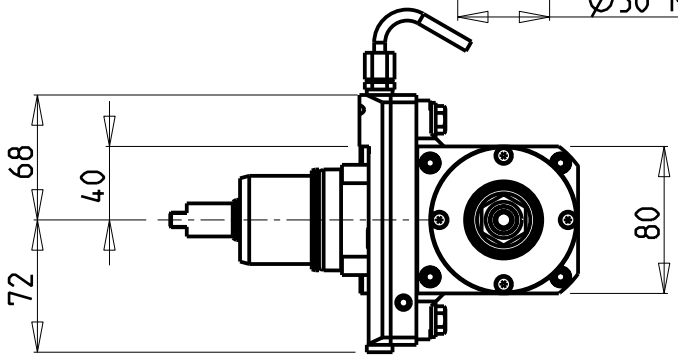

ATTENZIONE - ATTENTION - ACHTUNG

- VERIFICARE LE MISURE DI INGOMBRO PER POSSIBILE INTERFERENZA SU ALCUNI MODELLI DI MACCHINE
- Please check the overall sizes for possible interferences on some machine models
- Bitte überprüfen sie das ausmass um mögliche interferenzen auf einigen maschinen modellen zu vermeiden

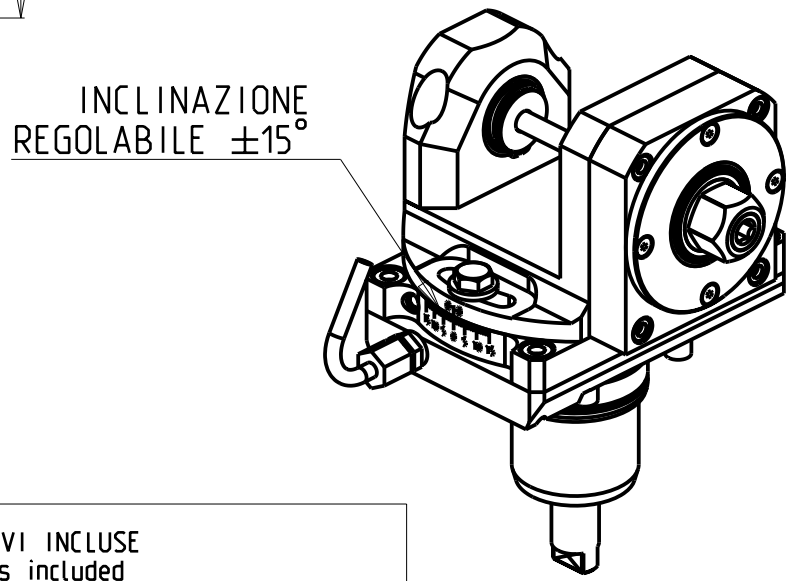

Cod. MT	I	RPM max	Coppia Max Max Torque Max Drehmoment	Reversibile lato mandrino/contromandrino Reversible sub/main spindle side Umkehrbare Spindelseite/ Gegenspindelseite	Lubrificazione est. Ext. coolant Aussenkuehlung	D (mm)	CHIAVI INCLUSE Keys included Schluessel inbegriffen					
NKM1941108	1:1	6000	50Nm	X	X	8	CHUB24	CHUB13	CHESL04	CHESL07	CHESL08	
NKM1941110	1:1	6000	50Nm	X	X	10	CHUB24	CHUB17	CHUB13	CHESL07	CHESL08	CHESL05
NKM1941113	1:1	6000	50Nm	X	X	13	CHUB24	CHUB19	CHUB13	CHESL07	CHESL08	
NKM1941116	1:1	6000	50Nm	X	X	16	CHUB24	CHUB13	CHESL08	CHESL07		

CMZ

MOD: TX52 Y3/Y2 QUATTRO/Y2 TWIN - TX66 Y3/Y2 QUATTRO/Y2 TWIN - TTL 52 - TTL 66
TA15-20-25-30M/Y/MS/MY/YS 15 ST.

MODULO MOTORIZZATO PORTACREATORE RADIALE
Radial driven gear hobber
Radial angetriebenes Zahnradwaelzfraes-Werkzeug

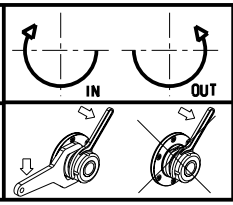

M.T. srl
Via Casino Albini 480
Tel. 0541/956034-957884
Fax 0541/956341
47842 S. GIOVANNI IN M. (RN)
e-mail: mtma@mtmarchetti.com
http://www.mtmarchetti.com

MT®

Subject to change without notice.

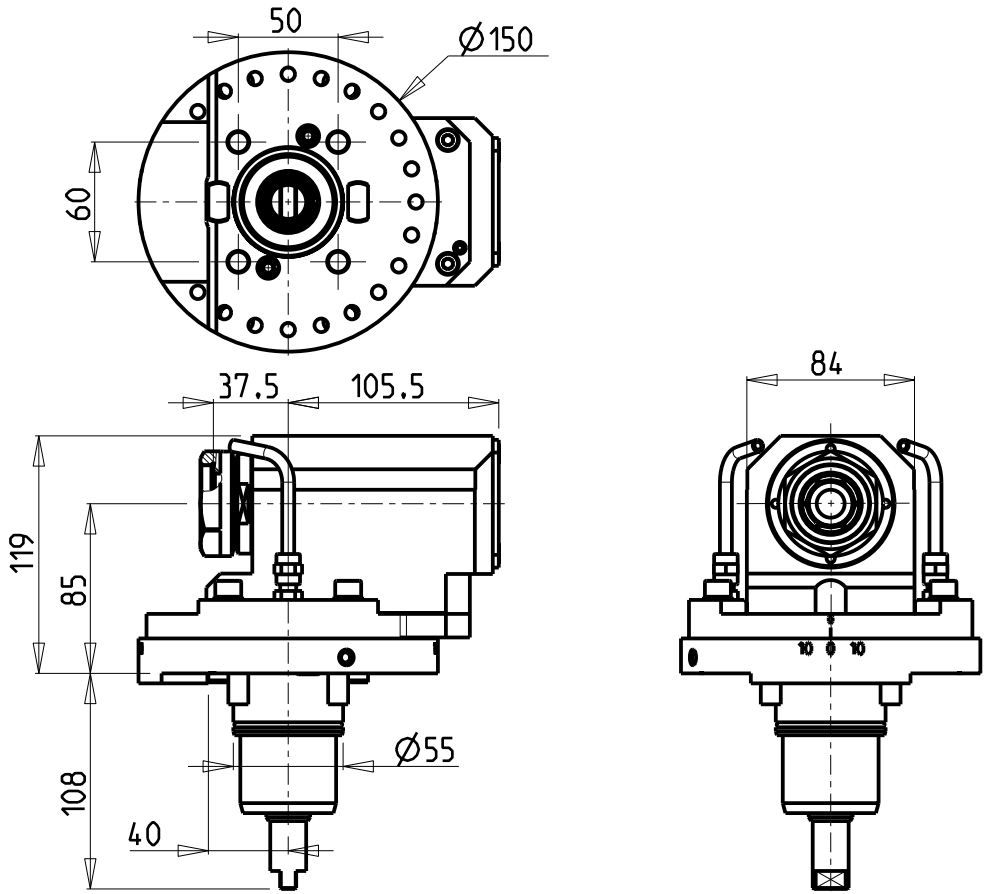

ATTENZIONE - ATTENTION - ACHTUNG

- VERIFICARE LE MISURE DI INGOMBRO PER POSSIBILE INTERFERENZA SU ALCUNI MODELLI DI MACCHINE
- Please check the overall sizes for possible interferences on some machine models
- Bitte überprüfen sie das ausmass um mögliche interferenzen auf einigen maschinen modellen zu vermeiden

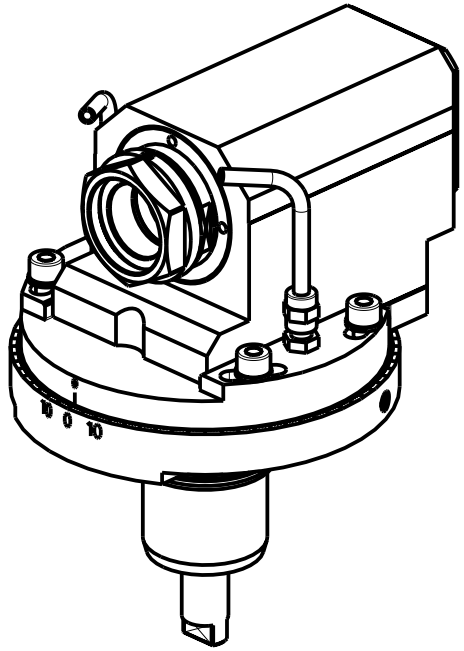

PER PORTAUTENSILI MODULARI MTSK-40 VEDI PAG. TBL300-1-40
FOR MTSK-40 QUIK CHANGE TOOLHOLDERS CLAMPINGS SEE PAGE TBL300-1-40
FUER MTSK-40 MODULARE WERKZEUGAUFNAHMEN SIEHE SEITE TBL300-1-40

Cod. MT	Mandrino Spindle Spindel	I	RPM	Coppia Max Max Torque Max Drehmoment	Reversibile lato mandrino/contromandrino Reversible sub/main spindle side Umkehrbare Spindelseite/ Gegenspindelseite	Lubr.esterna Ext. coolant Aussenkuehlung	CHIAVI INCLUSE Keys included Schluessel einbegriffen
NKM1240100	MTSK-40	1:1	6000	50Nm	X	X	n°2 CHUB46

CMZ

MOD: TX52 Y3/Y2 QUATTRO/Y2 TWIN - TX66 Y3/Y2 QUATTRO/Y2 TWIN

MODULO MOTORIZZATO ASSIALE MTSK PER POWER SKIVING H=85mm
Axial MTSK driven tool for Power Skiving H=85mm
Axial MTSK angetriebenes Werkzeug fuer Power Skiving H=85mm

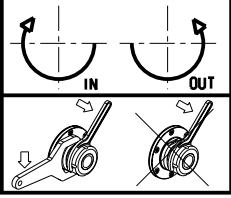

M.T. srl
Via Casino Albini 480
Tel. 0541/956034-957884
Fax 0541/956341
47842 S. GIOVANNI IN M. (RN)
e-mail: mtma@mtmarchetti.com
http://www.mtmarchetti.com

MT®

Subject to change without notice.

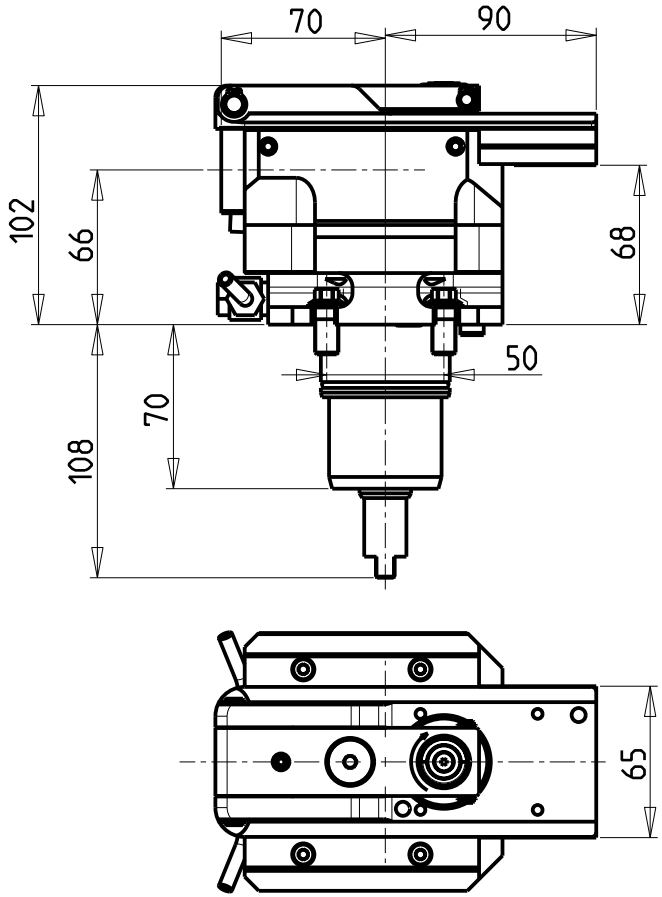

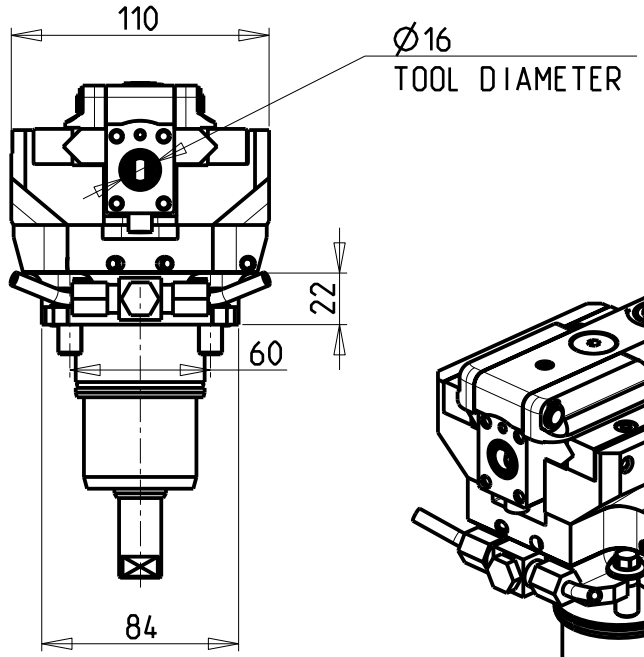

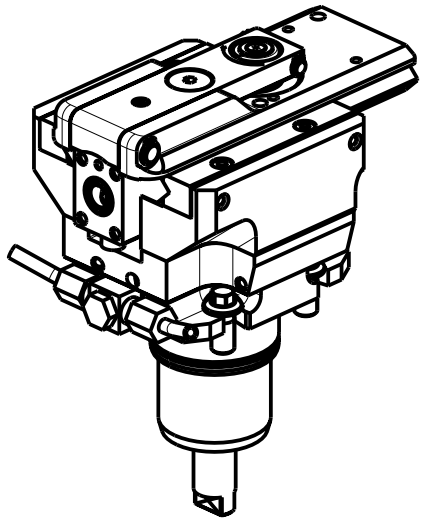

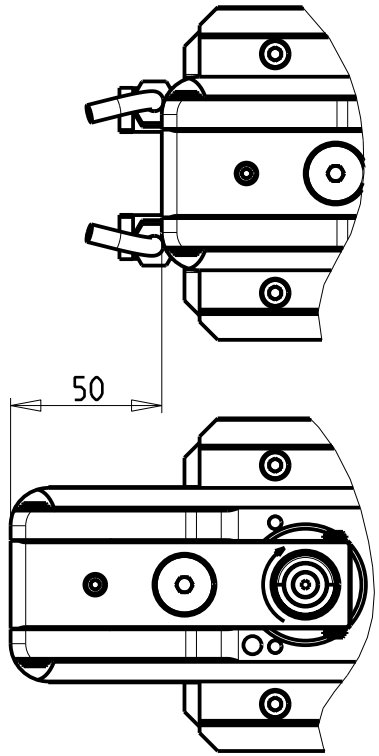

Cod. MT	I	RPM MAX	Reversibile lato mandrino/contromandrino Reversible sub/main spindle side Umkehrbare Spindelseite/ Gegenspindelseite	Lubr. esterna Ext. coolant Aussenkuehlung
NKM0910100	4:1	2000	X	X

DOTAZIONI - SUPPLIED WITH - AUSSTATTUNG

N°1 Boccola di riduz. Ø16-Ø12 e N°1 Boccola di riduz. Ø16-Ø10
N°1 Reduction bush Ø16-Ø12 and N°1 Reduction bush Ø16-Ø10
N°1 Reduzierbuchsen Ø16-Ø12 und N°1 Reduzierbuchsen Ø16-Ø10

PER UTENSILI STOZZATORI VEDI PAG. TBL400-1-00
FOR DRIVEN SLOTTING TOOL CUTTING-TOOLS SEE PAGE TBL400-1-00
FÜR NUTENSTOSS-WERKZEUG SCHNEIDEWERKZEUGE SIEHE SEITE TBL400-1-00

CMZ
MOD: TX52 Y3/Y2 QUATTRO/Y2 TWIN - TX66 Y3/Y2 QUATTRO/Y2 TWIN - TTL 52 - TTL 66
TA15-20-25-30M/Y/MS/MY/YS 15 ST.

MODULO MOTORIZZATO STOZZATORE CORSA 50mm H=66mm
Slotting driven tool 50mm stroke H=66mm
Keilnutenstossmaschine 50mm Hub H=66mm

M.T. srl
Via Casino Albini 480
Tel. 0541/956034-957884
Fax 0541/956341
47842 S. GIOVANNI IN M. (RN)
e-mail: mtma@mtmarchetti.com
http://www.mtmarchetti.com

Subject to change without notice.

04/2022

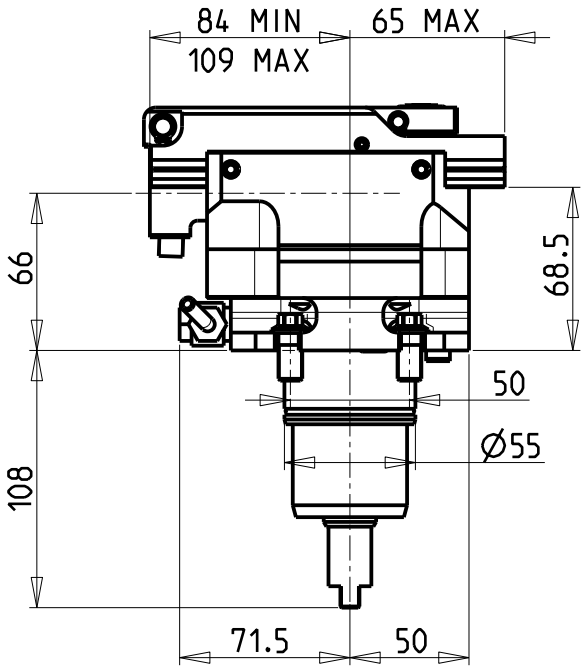

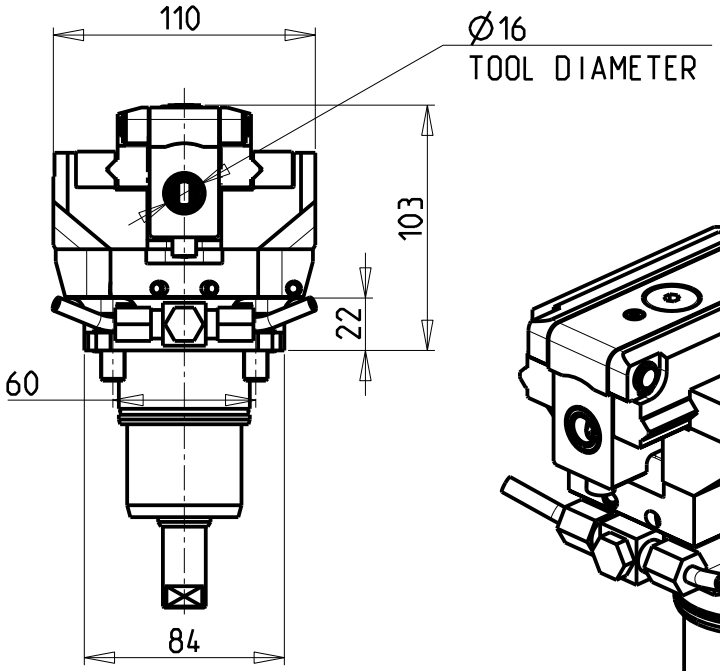

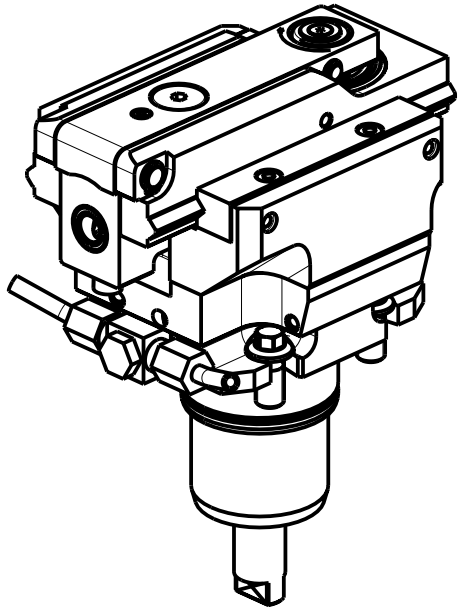

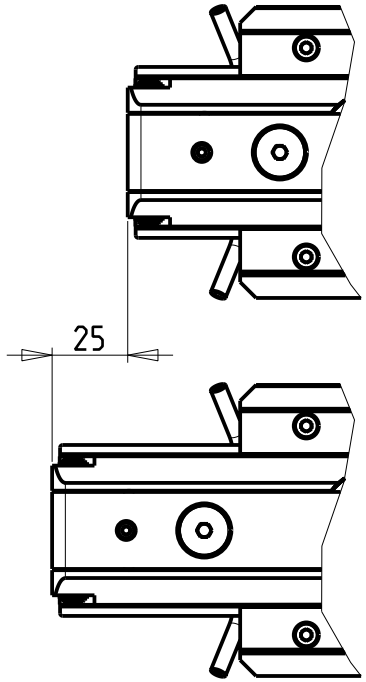

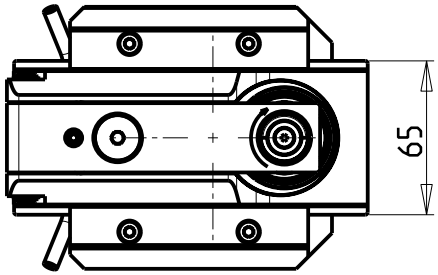

Cod. MT	I	RPM MAX	Reversibile lato mandrino/contromandrino Reversible sub/main spindle side Umkehrbare Spindelseite/ Gegenspindelseite	Lubr. esterna Ext. coolant Aussenkuehlung
NKM0910200	4:1	2400	X	X

DOTAZIONI - SUPPLIED WITH - AUSSTATTUNG

N°1 Boccola di riduz. Ø16-Ø12 e N°1 Boccola di riduz. Ø16-Ø10
N°1 Reduction bush Ø16-Ø12 and N°1 Reduction bush Ø16-Ø10
N°1 Reduzierbuchsen Ø16-Ø12 und N°1 Reduzierbuchsen Ø16-Ø10

PER UTENSILI STOZZATORI VEDI PAG. TBL400-1-00
FOR DRIVEN SLOTTING TOOL CUTTING-TOOLS SEE PAGE TBL400-1-00
FÜR NUTENSTOSS-WERKZEUG SCHNEIDEWERKZEUGE SIEHE SEITE TBL400-1-00

CMZ

MOD: TX52 Y3/Y2 QUATTRO/Y2 TWIN - TX66 Y3/Y2 QUATTRO/Y2 TWIN - TTL 52 - TTL 66
TA15-20-25-30M/Y/MS/MY/YS 15 ST.

MODULO MOTORIZZATO STOZZATORE CORSA 25mm H=66mm
Slotting driven tool 25mm stroke H=66mm
Keilnutenstossmaschine 25mm Hub H=66mm

M.T. srl
Via Casino Albini 480
Tel. 0541/956034-957884
Fax 0541/956341
47842 S. GIOVANNI IN M. (RN)
e-mail: mtma@mtmarchetti.com
http://www.mtmarchetti.com

Subject to change without notice.

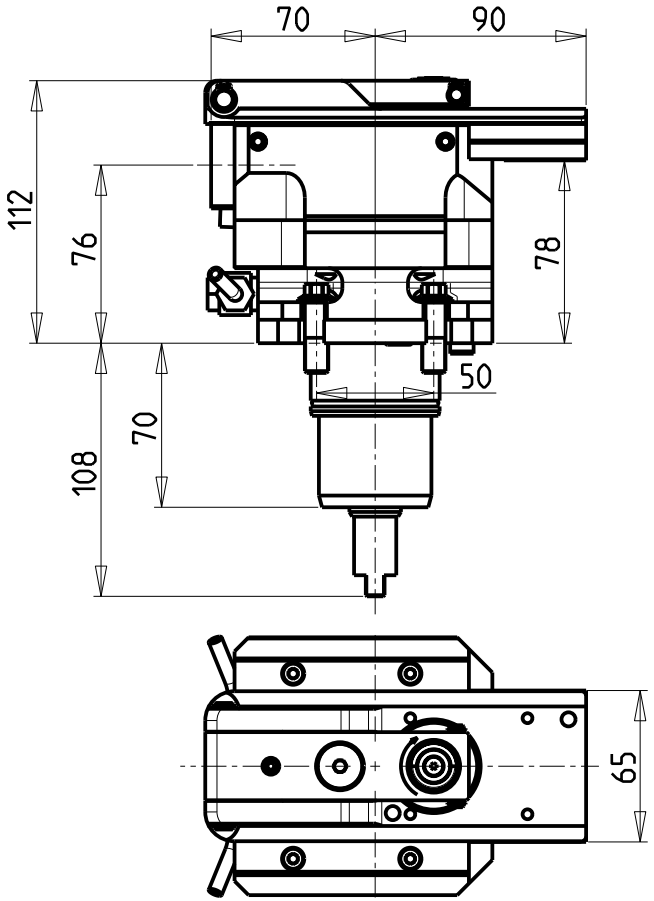

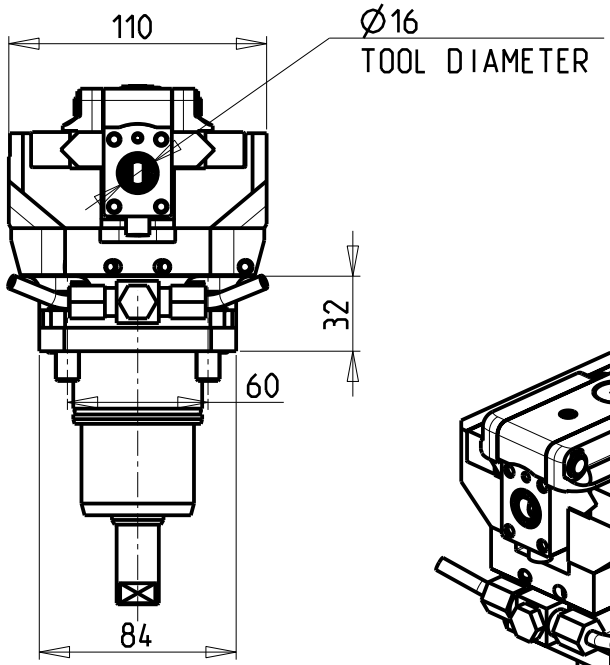

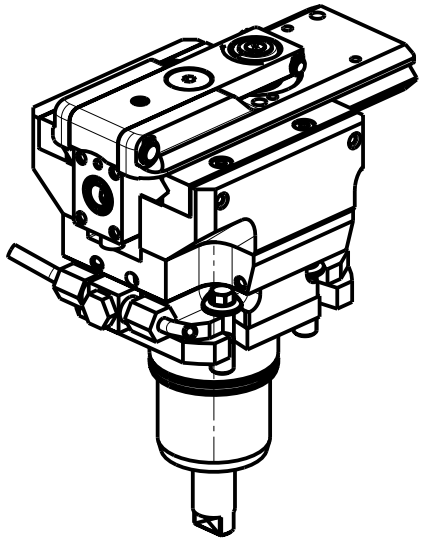

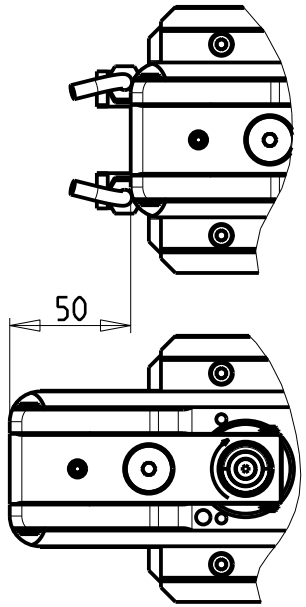

ATTENZIONE - ATTENTION - ACHTUNG

- VERIFICARE LE MISURE DI INGOMBRO PER POSSIBILE INTERFERENZA SU ALCUNI MODELLI DI MACCHINE
- Please check the overall sizes for possible interferences on some machine models
- Bitte überprüfen sie das ausmass um mögliche interferenzen auf einigen maschinen modellen zu vermeiden

Cod. MT	I	RPM MAX	Reversibile lato mandrino/contromandrino Reversible sub/main spindle side Umkehrbare Spindelseite/ Gegenspindelseite	Lubr. esterna Ext. coolant Aussenkuehlung
NKM0920100	4:1	2000	X	X

DOTAZIONI - SUPPLIED WITH - AUSSTATTUNG

N°1 Boccola di riduz. Ø16-Ø12 e N°1 Boccola di riduz. Ø16-Ø10
N°1 Reduction bush Ø16-Ø12 and N°1 Reduction bush Ø16-Ø10
N°1 Reduzierbuchsen Ø16-Ø12 und N°1 Reduzierbuchsen Ø16-Ø10

PER UTENSILI STOZZATORI VEDI PAG. TBL400-1-00
FOR DRIVEN SLOTTING TOOL CUTTING-TOOLS SEE PAGE TBL400-1-00
FÜR NUTENSTOSS-WERKZEUG SCHNEIDEWERKZEUGE SIEHE SEITE TBL400-1-00

CMZ

MOD: TX52 Y3/Y2 QUATTRO/Y2 TWIN - TX66 Y3/Y2 QUATTRO/Y2 TWIN - TTL 52 - TTL 66

MODULO MOTORIZZATO STOZZATORE CORSA 50mm H=76mm
Slotting driven tool 50mm stroke H=76mm
Keilnutenstossmaschine 50mm Hub H=76mm

M.T. srl
Via Casino Albini 480
Tel. 0541/956034-957884
Fax 0541/956341
47842 S. GIOVANNI IN M. (RN)
e-mail: mtma@mtmarchetti.com
http://www.mtmarchetti.com

Subject to change without notice.

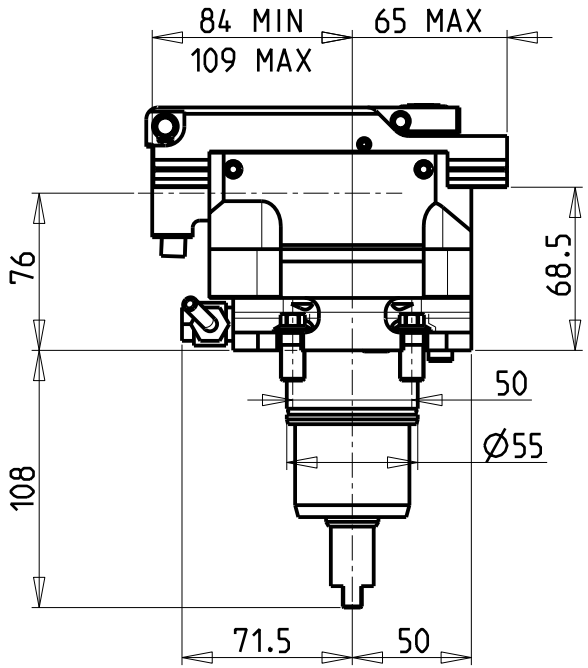

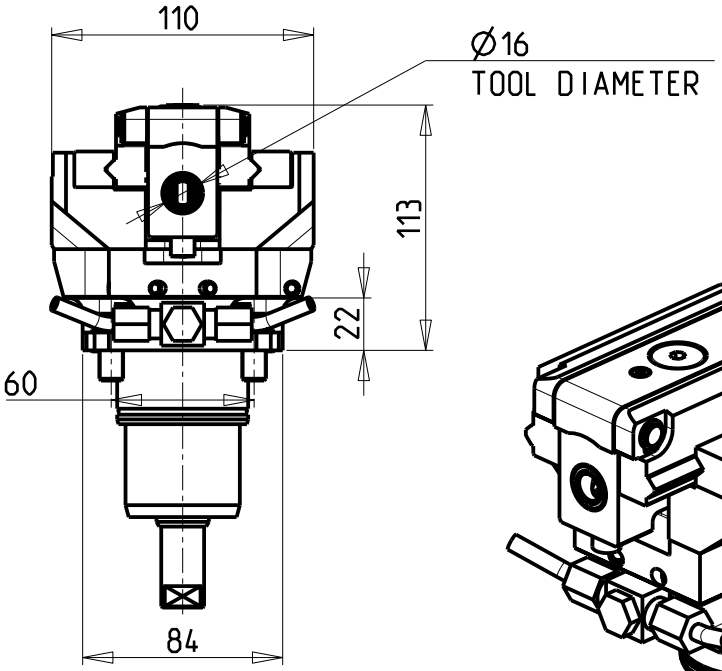

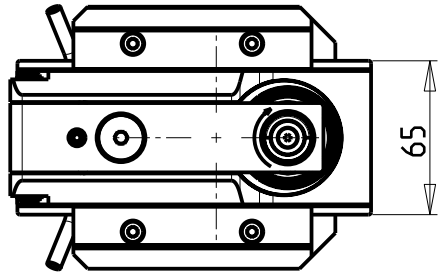

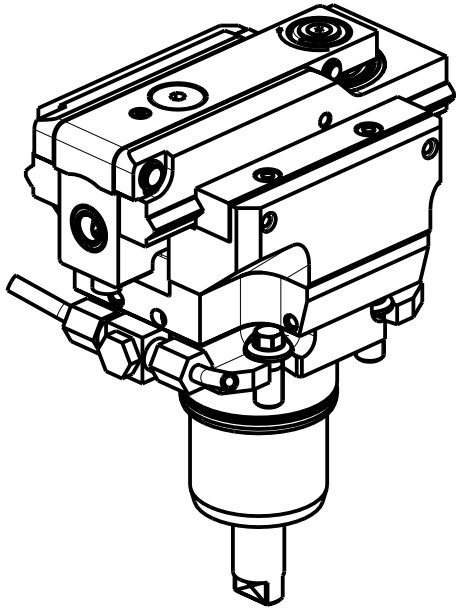

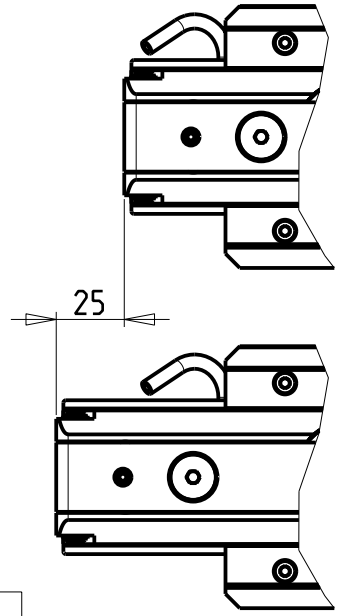

ATTENZIONE - ATTENTION - ACHTUNG

- VERIFICARE LE MISURE DI INGOMBRO PER POSSIBILE INTERFERENZA SU ALCUNI MODELLI DI MACCHINE
- Please check the overall sizes for possible interferences on some machine models
- Bitte überprüfen sie das ausmass um mögliche interferenzen auf einigen maschinen modellen zu vermeiden

Cod. MT	I	RPM MAX	Reversibile lato mandrino/contromandrino Reversible sub/main spindle side Umkehrbare Spindelseite/ Gegenspindelseite	Lubr. esterna Ext. coolant Aussenkuehlung
NKM0920200	4:1	2400	X	X

DOTAZIONI - SUPPLIED WITH - AUSSTATTUNG

N°1 Boccola di riduz. Ø16-Ø12 e N°1 Boccola di riduz. Ø16-Ø10
N°1 Reduction bush Ø16-Ø12 and N°1 Reduction bush Ø16-Ø10
N°1 Reduzierbuchsen Ø16-Ø12 und N°1 Reduzierbuchsen Ø16-Ø10

PER UTENSILI STOZZATORI VEDI PAG. TBL400-1-00
FOR DRIVEN SLOTTING TOOL CUTTING-TOOLS SEE PAGE TBL400-1-00
FÜR NUTENSTOSS-WERKZEUG SCHNEIDEWERKZEUGE SIEHE SEITE TBL400-1-00

CMZ

MOD: TX52 Y3/Y2 QUATTRO/Y2 TWIN - TX66 Y3/Y2 QUATTRO/Y2 TWIN - TTL 52 - TTL 66

MODULO MOTORIZZATO STOZZATORE CORSA 25mm H=76mm
Slotting driven tool 25mm stroke H=76mm
Keilnutenstossmaschine 25mm Hub H=76mm

M.T. srl
Via Casino Albini 480
Tel. 0541/956034-957884
Fax 0541/956341
47842 S. GIOVANNI IN M. (RN)
e-mail: mtma@mtmarchetti.com
http://www.mtmarchetti.com

Subject to change without notice.

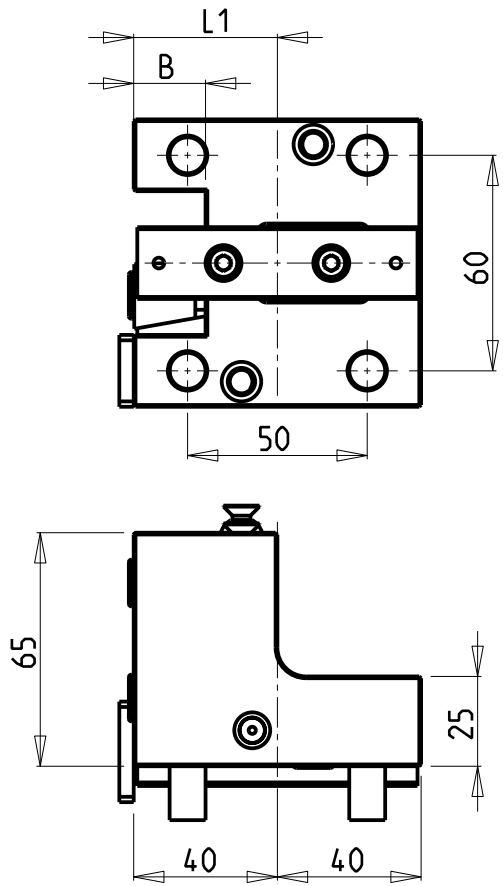

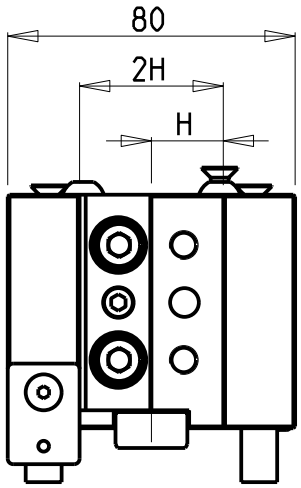

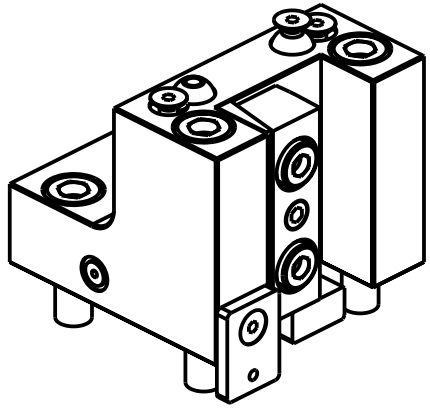

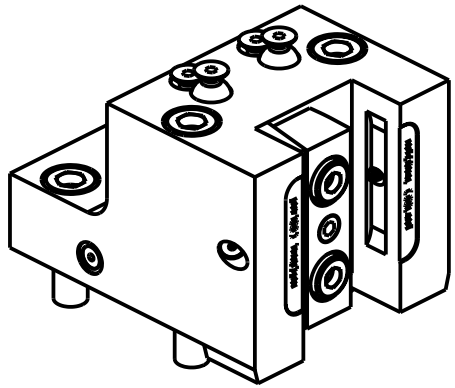

NKM1862000

Cod. MT	N°Utensili N°Tools N°Werkzeuge	Reversibile lato mandrino/contromandrino Reversible sub/main spindle side Umkehrbare Spindelseite/ Gegenspindelseite	Lubrificazione int. Coolant through Innenkuehlung	Lubrificazione est. Ext. coolant Aussenkuehlung	Misure Dimensions Masse	B	H	L1
NKM0162000	1	X	-	X	mm	20	20	40
NKM0161905	1	X	-	X	Inch	3/4"	3/4"	40
NKM1862000	1	X	P=70bar	X	mm	20	20	61

CMZ

MOD: TX52 Y3/Y2 QUATTRO/Y2 TWIN - TX66 Y3/Y2 QUATTRO/Y2 TWIN - TTL 52 - TTL 66
TA15-20-25-30M/Y/MS/MY/YS 15 ST.

PORTAUTENSILE RADIALE SINGOLO QD=20mm / QD=3/4"
Radial single static tool QD=20mm / QD=3/4"
Radial Single-Werkzeughalter QD=20mm / QD=3/4"

M.T. srl
Via Casino Albini 480
Tel. 0541/956034-957884
Fax 0541/956341
47842 S. GIOVANNI IN M. (RN)
e-mail: mtma@mtmarchetti.com
http://www.mtmarchetti.com

Subject to change without notice.

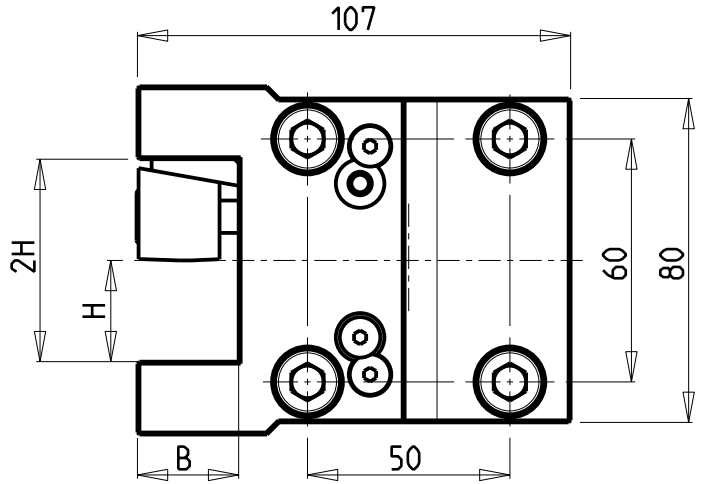

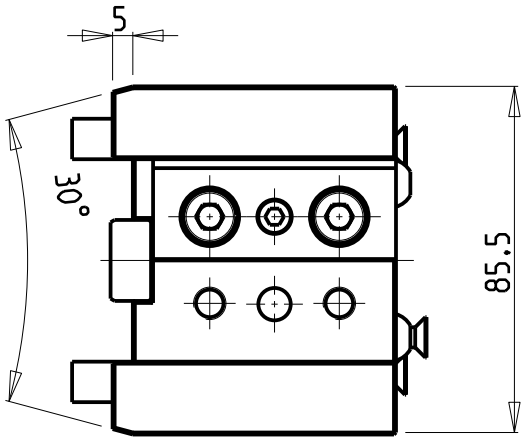

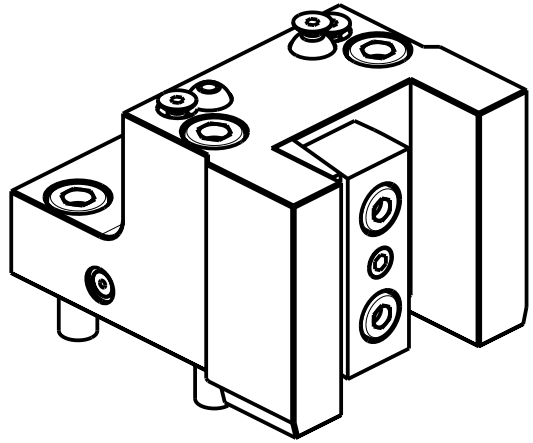

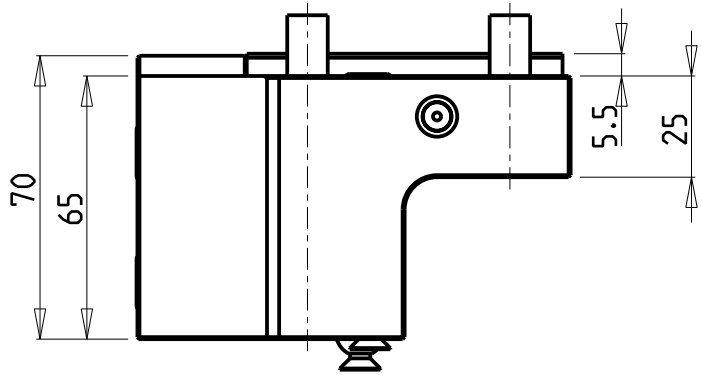

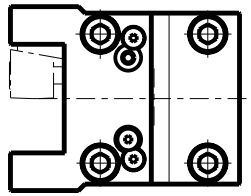

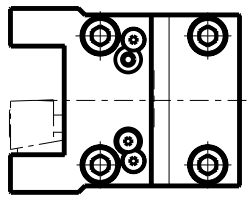

Cod. MT	Reversibile lato mandrino/contromandrino Reversible sub/main spindle side Umkehrbare Spindelseite/ Gegenspindelseite	Misure Dimensions Masse	B	H
NKM0162500	X	mm	25	25
NKM0162540	X	Inch	1"	1"

CMZ

MOD: TX52 Y3/Y2 QUATTRO/Y2 TWIN - TX66 Y3/Y2 QUATTRO/Y2 TWIN - TTL 52 - TTL 66
TA15-20-25-30M/Y/MS/MY/YS 15 ST.

PORTAUTENSILE RADIALE SINGOLO QD=25mm / QD=1"
Radial single static tool QD=25mm / QD=1"
Radial Single-Werkzeughalter QD=25mm / QD=1"

M.T. srl
Via Casino Albini 480
Tel. 0541/956034-957884
Fax 0541/956341
47842 S. GIOVANNI IN M. (RN)
e-mail: mtma@mtmarchetti.com
http://www.mtmarchetti.com

Subject to change without notice.

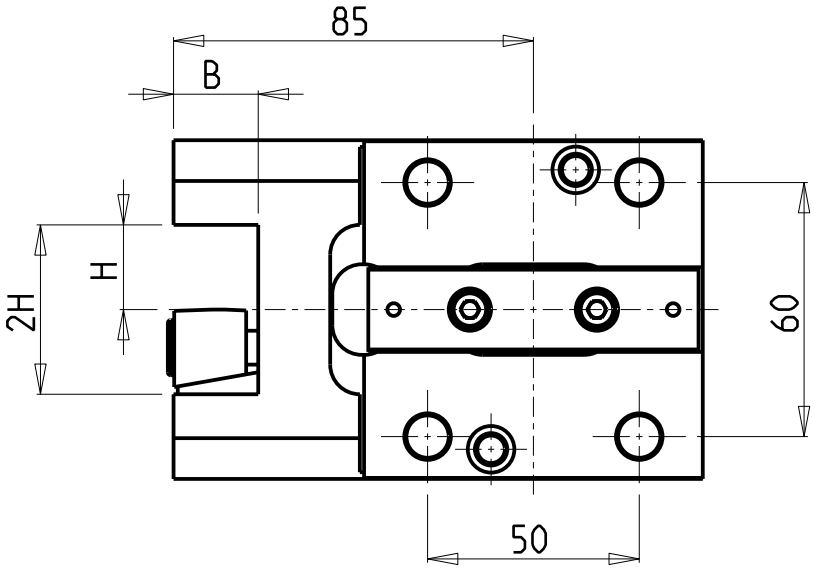

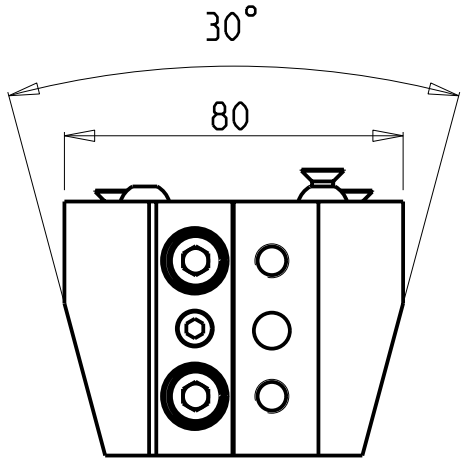

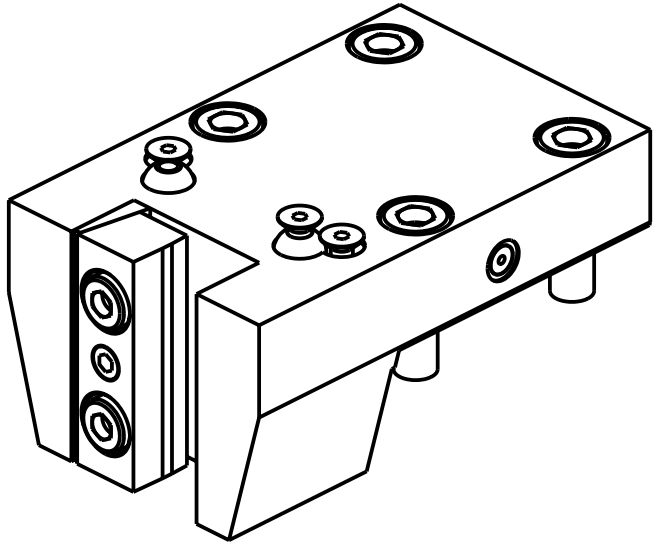

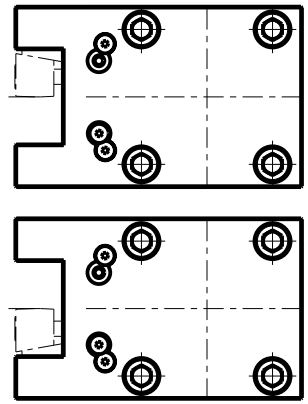

Cod. MT	N°Utensili N°Tools N°Werkzeuge	Lubrificazione est. Ext. coolant Aussenkuehlung	Misure Dimensions Masse	B	H
NKM1712000	1	X	mm	20	20

CMZ

MOD: TX52 Y3/Y2 QUATTRO/Y2 TWIN - TX66 Y3/Y2 QUATTRO/Y2 TWIN - TTL 52 - TTL 66
TA15-20-25-30M/Y/MS/MY/YS 15 ST.

PORTAUTENSILE RADIALE SINGOLO ARRETRATO QD=20mm
Radial single rear set static tool QD=20mm
Radial Single-Werkzeughalter zurueckversetzt QD=20mm

M.T. srl
Via Casino Albini 480
Tel. 0541/956034-957884
Fax 0541/956341
47842 S. GIOVANNI IN M. (RN)
e-mail: mtma@mtmarchetti.com
http://www.mtmarchetti.com

Subject to change without notice.

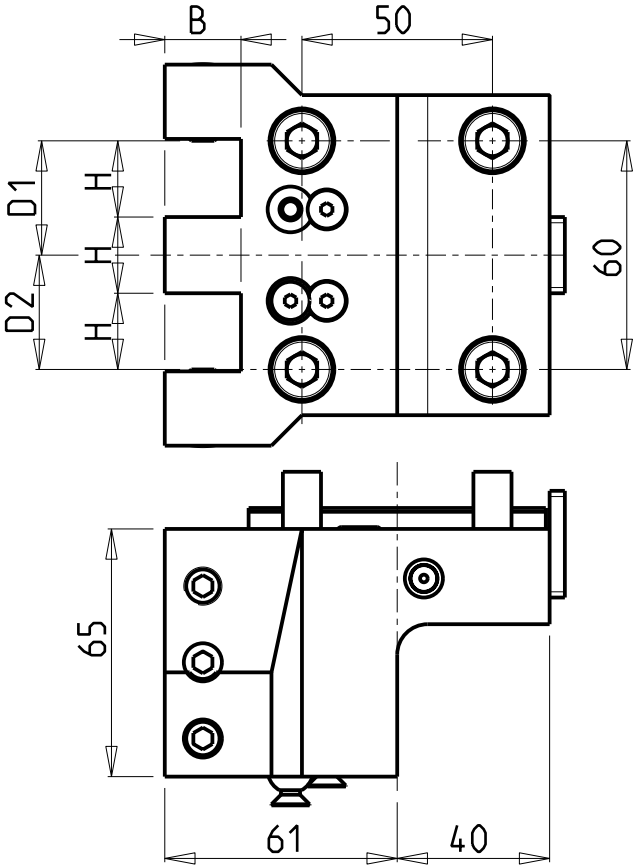

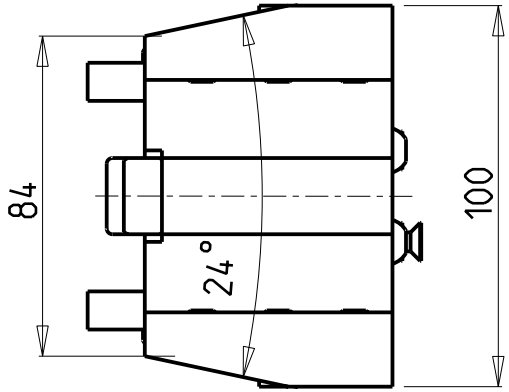

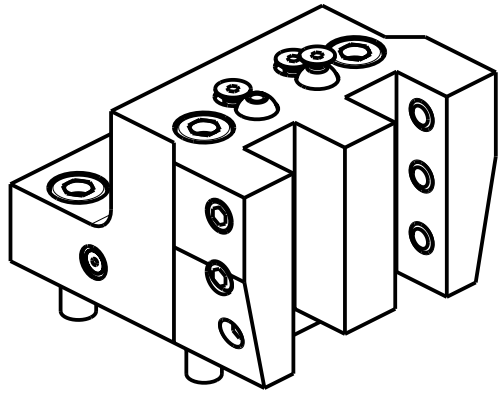

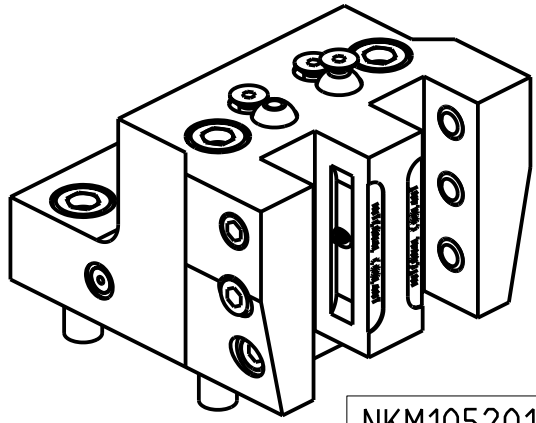

NKM1052010

Cod. MT	N°Utensili N°Tools N°Werkzeuge	Reversibile lato mandrino/contromandrino Reversible sub/main spindle side Umkehrbare Spindelseite/ Gegenspindelseite	Lubrificazione int. Coolant through Innenkuehlung	Lubrificazione est. Ext. coolant Aussenkuehlung	Misure Dimensions Masse	H	B	D1	D2
NKM1052000	2	X	-	X	mm	20	20	30	30
NKM1051905	2	X	-	X	inch	3/4"	3/4"	1 1/8"	1 1/8"
NKM1052010	2	X	P=70bar	X	mm	20	20	30	30

CMZ

MOD: TX52 Y3/Y2 QUATTRO/Y2 TWIN - TX66 Y3/Y2 QUATTRO/Y2 TWIN - TTL 52 - TTL 66
TA15-20-25-30M/Y/MS/MY/YS 15 ST.

PORTAUTENSILE RADIALE SOVRAPPOSTO QD=20mm / QD=3/4"
Radial single side twin static tool QD=20mm / QD=3/4"
Radial Werkzeughalter ueberlagert QD=20mm / QD=3/4"

M.T. srl
Via Casino Albini 480
Tel. 0541/956034-957884
Fax 0541/956341
47842 S. GIOVANNI IN M. (RN)
e-mail: mtma@mtmarchetti.com
http://www.mtmarchetti.com

MT®

Subject to change without notice.

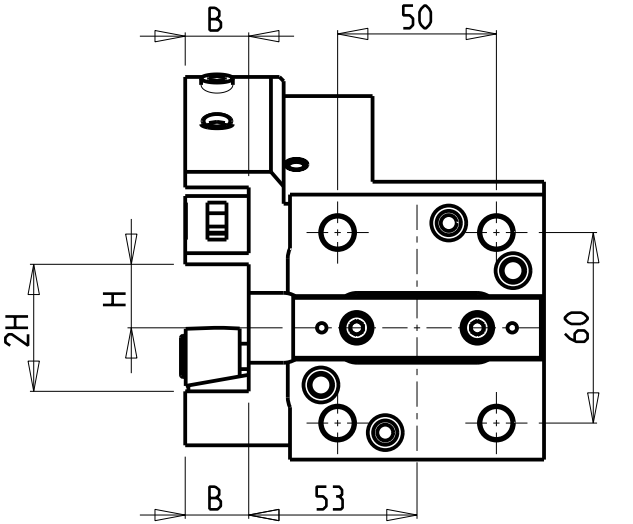

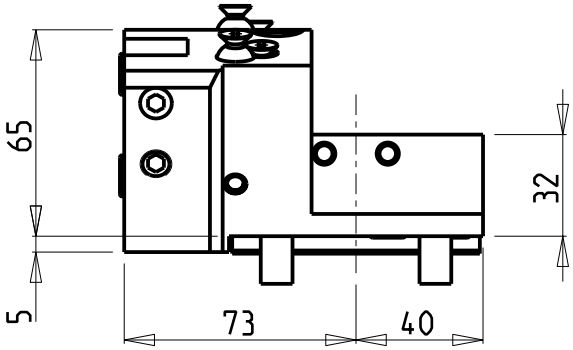

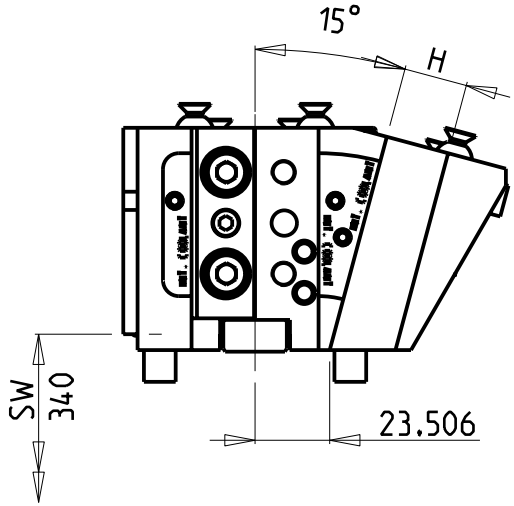

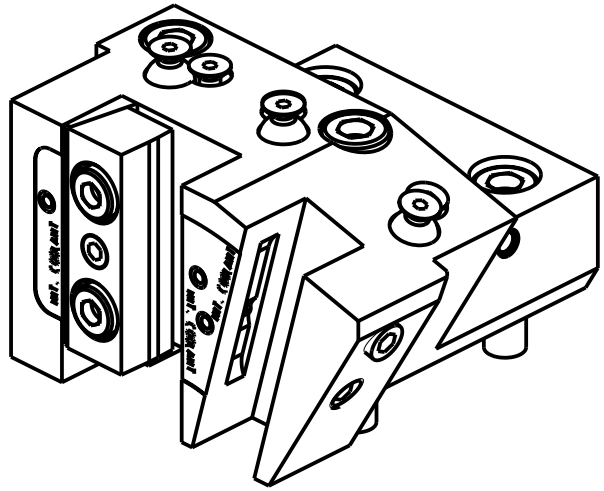

Cod. MT	N°Utensili N°Tools N°Werkzeuge	Lubrificazione int. Coolant through Innenkuehlung	Lubrificazione est. Ext. coolant Aussenkuehlung	Misure Dimensions Masse	B	H
NKM1892010	2	P=70bar	X	mm	20	20

CMZ

MOD: TX52 Y3/Y2 QUATTRO/Y2 TWIN - TX66 Y3/Y2 QUATTRO/Y2 TWIN - TTL 52 - TTL 66

PORTAUTENSILE RADIALE MULTIPLO QD=20mm
Radial multiple static tool QD=20mm
Radial Mehrfach-Halter QD=20mm

M.T. srl
Via Casino Albini 480
Tel. 0541/956034-957884
Fax 0541/956341
47842 S. GIOVANNI IN M. (RN)
e-mail: mtma@mtmarchetti.com
http://www.mtmarchetti.com

Subject to change without notice.

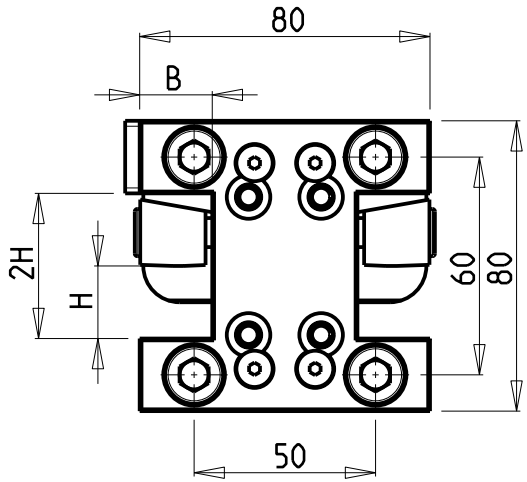

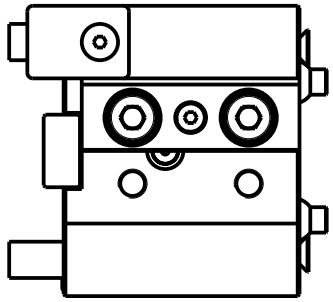

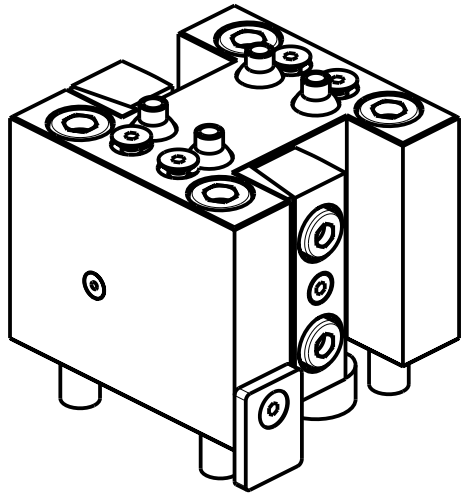

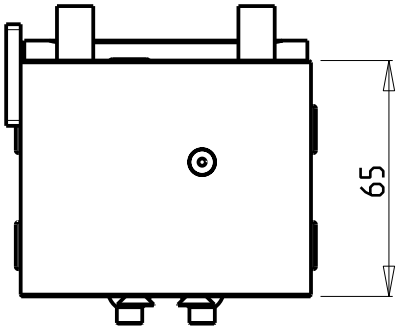

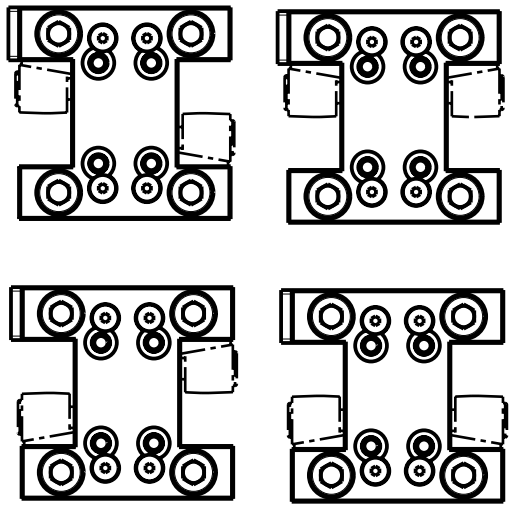

Cod. MT	N°Utensili N°Tools N°Werkzeuge	Reversibile lato mandrino/contromandrino Reversible sub/main spindle side Umkehrbare Spindelseite/ Gegenspindelseite	Misure Dimensions Masse	B	H
NKM0152000	2	X	mm	20	20
NKM0151905	2	X	Inch	3/4"	3/4"

CMZ

MOD: TX52 Y3/Y2 QUATTRO/Y2 TWIN - TX66 Y3/Y2 QUATTRO/Y2 TWIN - TTL 52 - TTL 66
TA15-20-25-30M/Y/MS/MY/YS 15 ST.

PORTAUTENSILE RADIALE DOPPIO QD=20mm / QD=3/4"
Radial double static tool QD=20mm / QD=3/4"
Radial Doppel-Werkzeughalter QD=20mm / QD=3/4"

M.T. srl
Via Casino Albini 480
Tel. 0541/956034-957884
Fax 0541/956341
47842 S. GIOVANNI IN M. (RN)
e-mail: mtma@mtmarchetti.com
http://www.mtmarchetti.com

Subject to change without notice.

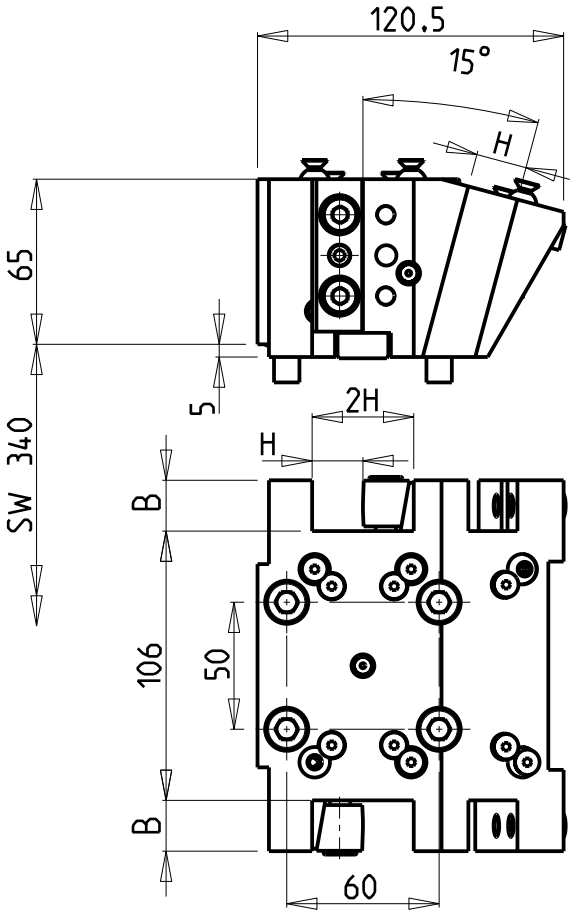

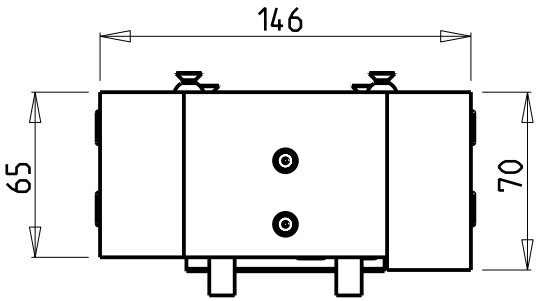

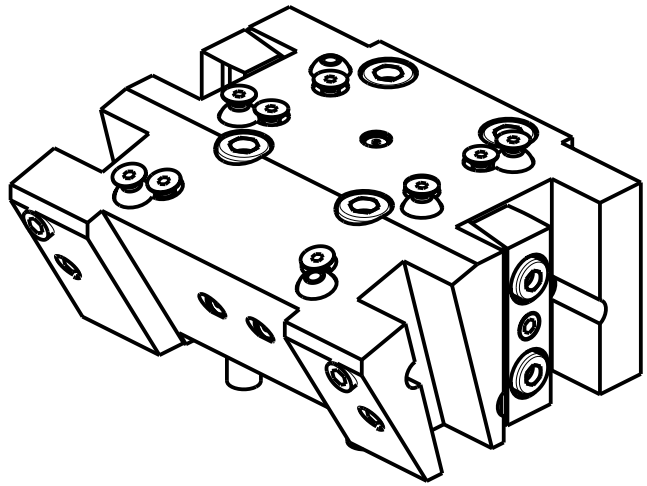

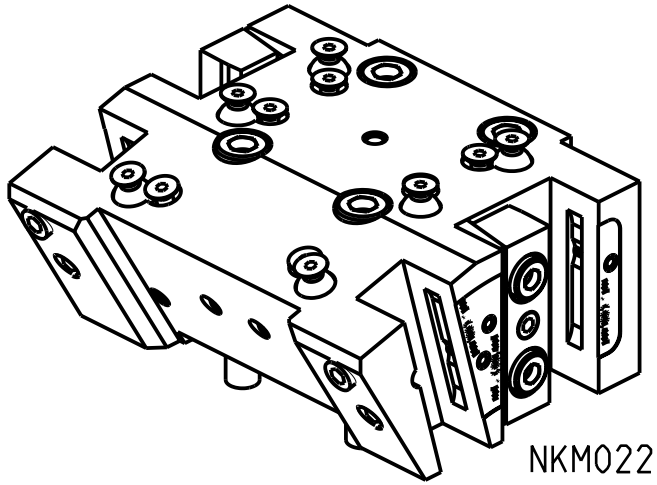

NKM0221010

Cod. MT	N°Utensili N°Tools N°Werkzeuge	Lubrificazione int. Coolant through Innenkuehlung	Lubrificazione est. Ext. coolant Aussenkuehlung	Misure Dimensions Masse	B	H
NKM0221000	4	–	X	mm	20	20
NKM0221905	4	–	X	Inch	3/4"	3/4"
NKM0221010	4	P=70bar	X	mm	20	20

CMZ

MOD: TX52 Y3/Y2 QUATTRO/Y2 TWIN - TX66 Y3/Y2 QUATTRO/Y2 TWIN - TTL 52 - TTL 66

PORTAUTENSILE RADIALE MULTIPLO QD=20mm / QD=3/4"
Radial multiple static tool QD=20mm / QD=3/4"
Radial Mehrfach-Werkzeughalter QD=20mm / QD=3/4"

M.T. srl
Via Casino Albini 480
Tel. 0541/956034-957884
Fax 0541/956341
47842 S. GIOVANNI IN M. (RN)
e-mail: mtma@mtmarchetti.com
http://www.mtmarchetti.com

Subject to change without notice.

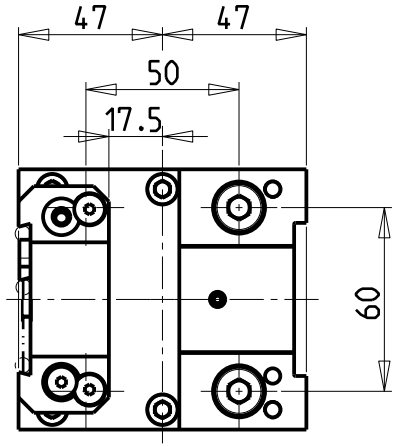

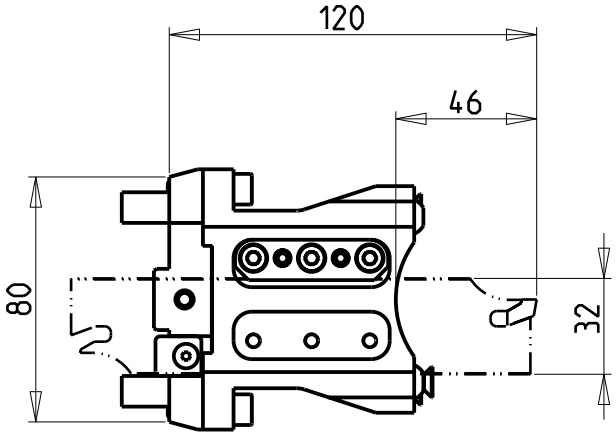

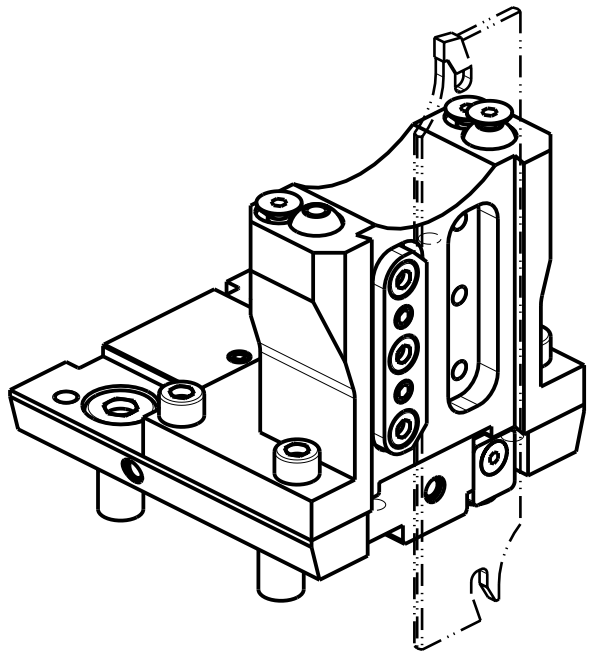

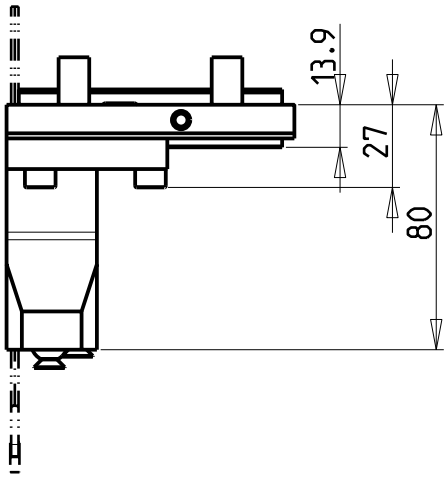

POSSIBILITA' DI LAVORO M3/M4
OPTION OF M3/M4 WORKING
ARBEITSMÖGLICHKEIT M3/M4

Cod. MT	N°Utensili N°Tools N°Werkzeuge	Reversibile lato mandrino/contromandrino Reversible sub/main spindle side Umkehrbare Spindelseite/ Gegenspindelseite	Lubr.esterna Ext. coolant Aussenkuehlung
NKM1030132	1	X	X

DOTAZIONI - SUPPLIED WITH - AUSSTATTUNG

N°1 - LAMA - BLADE - KLINGE ISCAR H=32 Sp. 3/4mm
(KENNAMETAL OPTIONAL)

N°10 - INSERTI - INSERTS - EINLAGEN

N°1 - CHIAVE A T PER MONTAGGIO INSERTI
- T-WRENCH FOR INSERT SET UP
- T-SCHLUESSEL FUER EINSATZSTUECK-MONTAGE

CMZ
MOD: TX52 Y3/Y2 QUATTRO/Y2 TWIN - TX66 Y3/Y2 QUATTRO/Y2 TWIN - TTL 52 - TTL 66
TA15-20-25-30M/Y/MS/MY/YS 15 ST.

PORTAUTENSILE RADIALE PER LAMA
Radial blade holder
Radial Abstechhalter

M.T. srl
Via Casino Albini 480
Tel. 0541/956034-957884
Fax 0541/956341
47842 S. GIOVANNI IN M. (RN)
e-mail: mtma@mtmarchetti.com
http://www.mtmarchetti.com

Subject to change without notice.

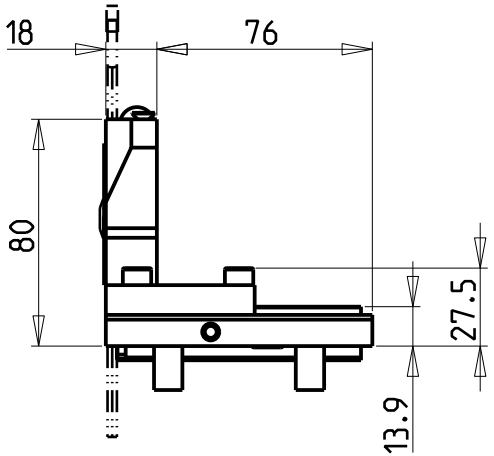

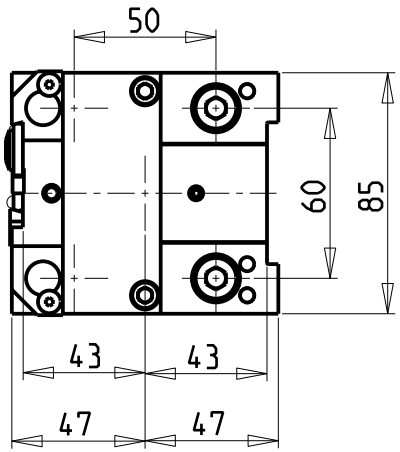

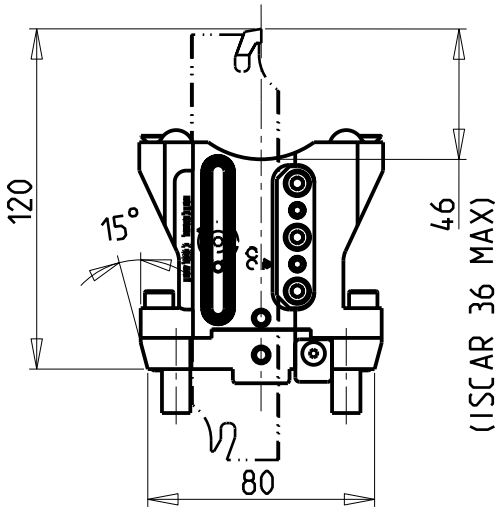

versione dx
right version
version rechts

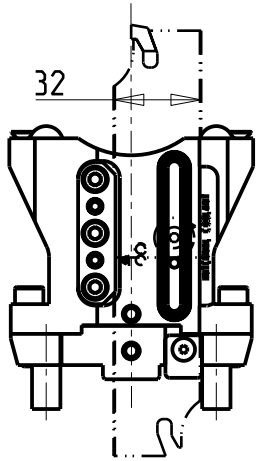

versione sx
left version
version links

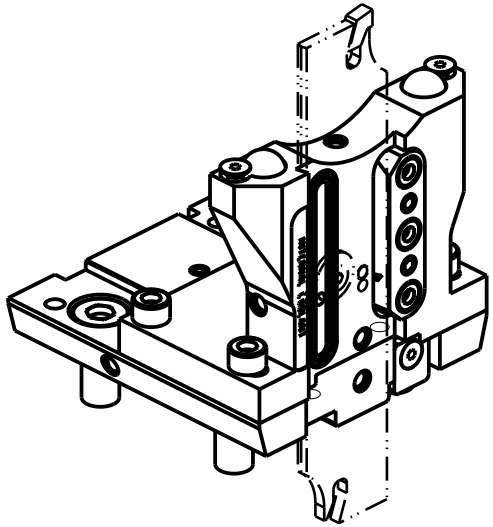

KIT LAME NON INCLUSI (OPZIONALI)
BLADES NOT SUPPLIED WITH (OPTIONAL)
KLINGEN NICHT INBEGRIFFEN (OPTIONAL)

- LAMA-BLADE-KLINGE SANDVIK H=32 sp.3 cod. QD_NN2G60C25A
  +INSERTI-INSERTS-EINLAGEN cod. QD_NG_0300_0002_CM_1145 (10 pz.)
- LAMA-BLADE-KLINGE SANDVIK H=32 sp.4 cod. QD_NN2H60C25A
  +INSERTI-INSERTS-EINLAGEN cod. QD_NH_0400_0002_CM_1145 (10 pz.)
- LAMA-BLADE-KLINGE ISCAR H=32 sp.3 cod. SGFH_32K_3
  +INSERTI-INSERTS-EINLAGEN cod. 6011365 (10pz.)
- LAMA-BLADE-KLINGE ISCAR H=32 sp.4 cod. SGFH_32K_4
  +INSERTI-INSERTS-EINLAGEN cod. 6011366 (10pz.)
- LAMA-BLADE-KLINGE WALTER H=32 sp.3 cod. G2042.32N-3T45SX-P
  +INSERTI-INSERTS-EINLAGEN cod. SX-3E300N02-CE4 WSM33S (10pz.) + CHIAVE-KEY cod. FS1494
- LAMA-BLADE-KLINGE WALTER H=32 sp.4 cod. G2042.32N-4T50SX-P
  +INSERTI-INSERTS-EINLAGEN cod. SX-4E400N02-CE4 WSM33S (10pz.) + CHIAVE-KEY cod. FS1494

Cod. MT		N°Utensili N°Tools N°Werkzeuge	Reversibile lato mandrino/contromandrino Reversible sub/main spindle side Umkehrbare Spindelseite/ Gegenspindelseite	Lubr.esterna Ext. coolant Aussenkuehlung	Lubr.interna Coolant through Innenkuehlung
versione dx right version version rechts	versione sx left version version links				
NKM1110132R	NKM1110132L	1	X	X	P=70bar

CMZ
MOD: TX52 Y3/Y2 QUATTRO/Y2 TWIN - TX66 Y3/Y2 QUATTRO/Y2 TWIN - TTL 52 - TTL 66
TA15-20-25-30M/Y/MS/MY/YS 15 ST.

PORTAUTENSILE RADIALE PER LAMA CON LUBRIFICAZIONE INTERNA
Radial blade holder with internal coolant
Radial Abstechhalter mit Innenkuehlung

M.T. srl
Via Casino Albini 480
Tel. 0541/956034-957884
Fax 0541/956341
47842 S. GIOVANNI IN M. (RN)
e-mail: mtma@mtmarchetti.com
http://www.mtmarchetti.com

Subject to change without notice.

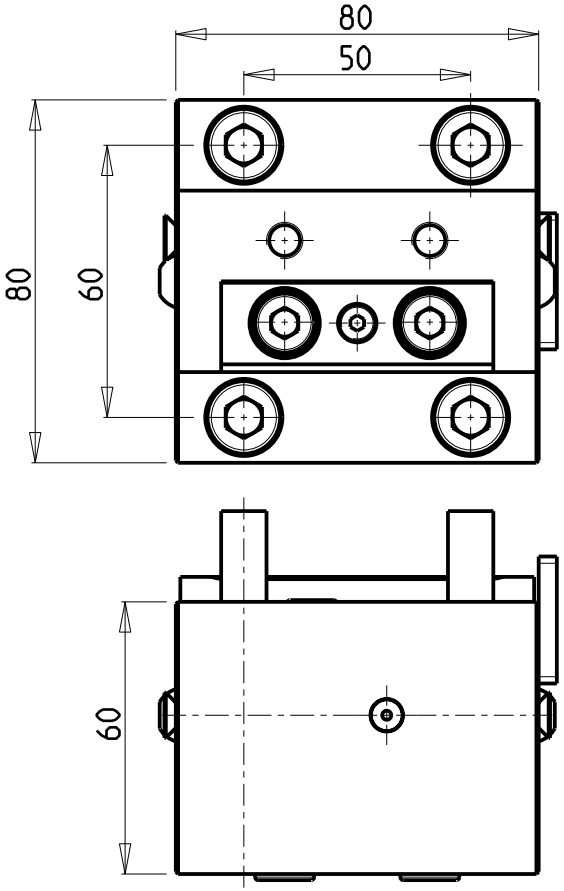

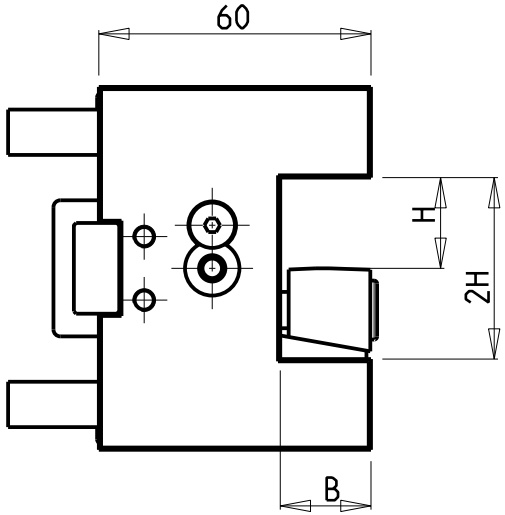

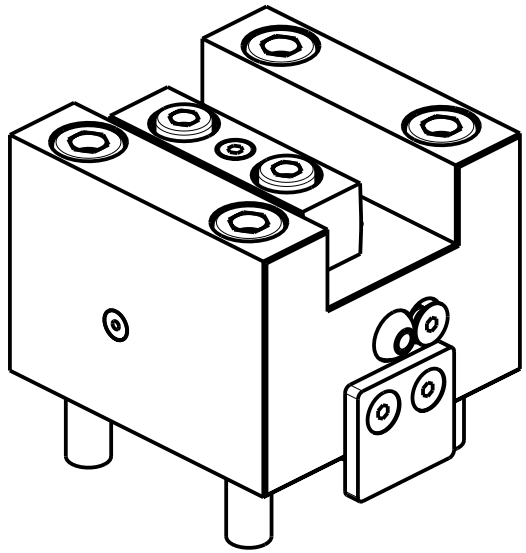

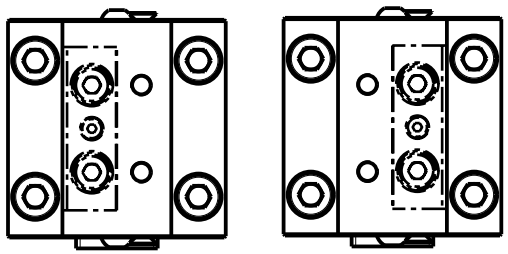

Cod. MT	N°Utensili N°Tools N°Werkzeuge	Reversibile lato mandrino/contromandrino Reversible sub/main spindle side Umkehrbare Spindelseite/ Gegenspindelseite	Misure Dimensions Masse	B	H
NKM0182000	1	X	mm	20	20
NKM0181905	1	X	Inch	3/4"	3/4"

CMZ

MOD: TX52 Y3/Y2 QUATTRO/Y2 TWIN - TX66 Y3/Y2 QUATTRO/Y2 TWIN - TTL 52 - TTL 66
TA15-20-25-30M/Y/MS/MY/YS 15 ST.

PORTAUTENSILE ASSIALE SINGOLO QD=20mm / QD=3/4"
Axial single static tool QD=20mm / QD=3/4"
Axial Single-Werkzeughalter QD=20mm / QD=3/4"

M.T. srl
Via Casino Albini 480
Tel. 0541/956034-957884
Fax 0541/956341
47842 S. GIOVANNI IN M. (RN)
e-mail: mtma@mtmarchetti.com
http://www.mtmarchetti.com

Subject to change without notice.

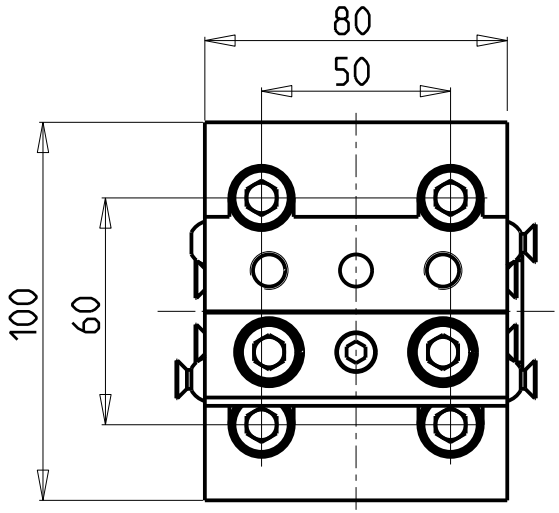

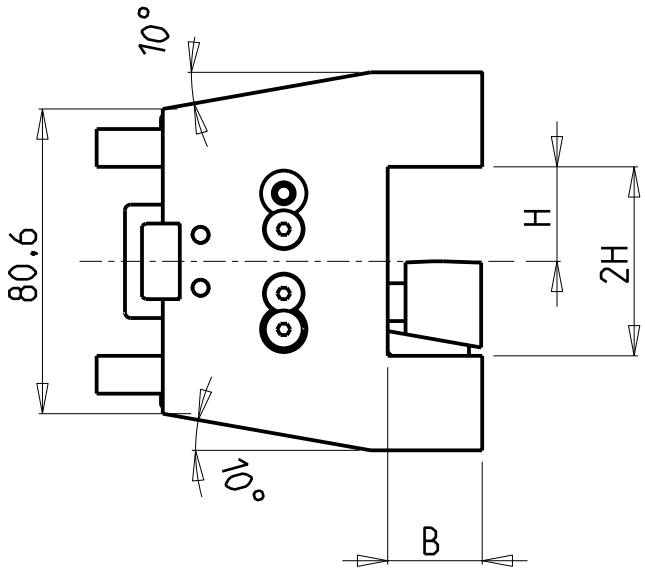

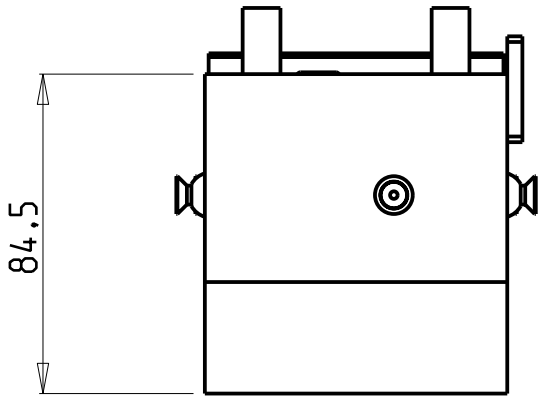

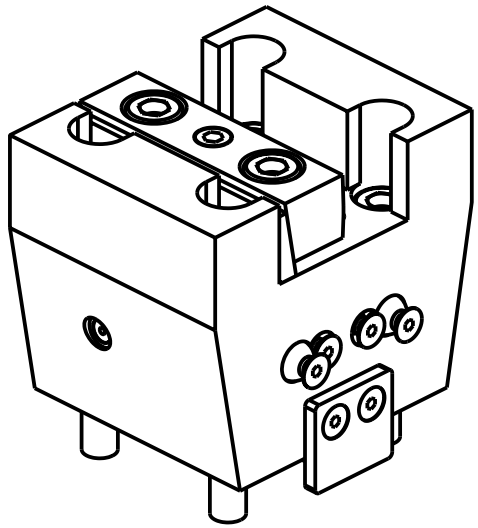

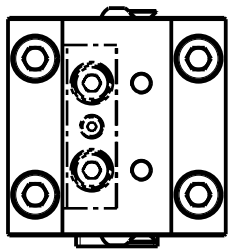

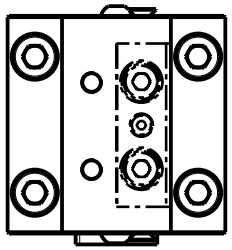

Cod. MT	N°Utensili N°Tools N°Werkzeuge	Reversibile lato mandrino/contromandrino Reversible sub/main spindle side Umkehrbare Spindelseite/ Gegenspindelseite	Lubrificazione est. Ext. coolant Aussenkuehlung	Misure Dimensions Masse	B	H
NKM0182500	1	X	X	mm	25	25

CMZ

MOD: TX52 Y3/Y2 QUATTRO/Y2 TWIN - TX66 Y3/Y2 QUATTRO/Y2 TWIN - TTL 52 - TTL 66
TA15-20-25-30M/Y/MS/MY/YS 15 ST.

PORTAUTENSILE ASSIALE SINGOLO QD=25mm
Axial single static tool QD=25mm
Axial Single-Werkzeughalter QD=25mm

M.T. srl
Via Casino Albini 480
Tel. 0541/956034-957884
Fax 0541/956341
47842 S. GIOVANNI IN M. (RN)
e-mail: mtma@mtmarchetti.com
http://www.mtmarchetti.com

Subject to change without notice.

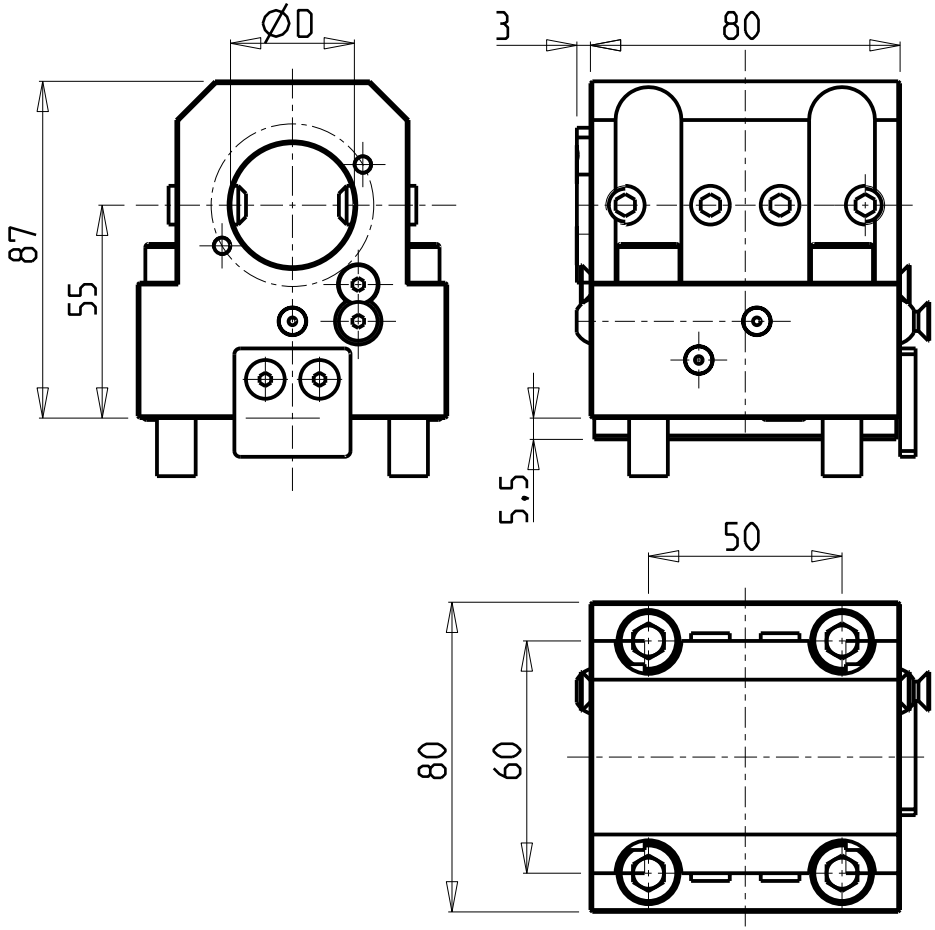

KIT ADDUZIONE INTERNA (OPZIONALE)
KIT FOR INTERNAL COOLANT (OPTIONAL)
KIT FUER INTERNE KUEHLMITTELZUFUHR (OPTIONAL)
Ø32-Ø1 1/4" cod. KIT1000001

PER BOCCOLE DI RIDUZIONE VEDI PAG. TBL150-1-00
FOR REDUCING BUSHINGS SEE PAGE TBL150-1-00
FUR REDUZIERBUCHSE SIEHE SEITE TBL150-1-00

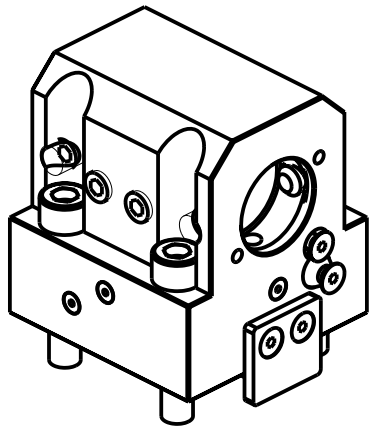

Cod. MT	N°Utensili N°Tools N°Werkzeuge	Reversibile lato mandrino/contromandrino Reversible sub/main spindle side Umkehrbare Spindelseite/ Gegenspindelseite	Lubrificazione int. opzionale Coolant through optional Innenkuehlung Optional	Lubrificazione est. Ext. coolant Aussenkuehlung	Misure Dimensions Masse	D
NKM0113220	1	X	X	X	mm	32
NKM0113230	1	X	X	X	Inch	1 1/4"

CMZ
MOD: TX52 Y3/Y2 QUATTRO/Y2 TWIN - TX66 Y3/Y2 QUATTRO/Y2 TWIN - TTL 52 - TTL 66
TA15-20-25-30M/Y/MS/MY/YS 15 ST.

PORTAUTENSILE ASSIALE PER BARENO Ø32mm / Ø1 1/4" H=55mm
Axial single boring bar holder Ø32mm / Ø1 1/4" H=55mm
Axial Bohrhalter Ø32mm / Ø1 1/4" H=55mm

M.T. srl
Via Casino Albini 480
Tel. 0541/956034-957884
Fax 0541/956341
47842 S. GIOVANNI IN M. (RN)
e-mail: mtma@mtmarchetti.com
http://www.mtmarchetti.com

Subject to change without notice.

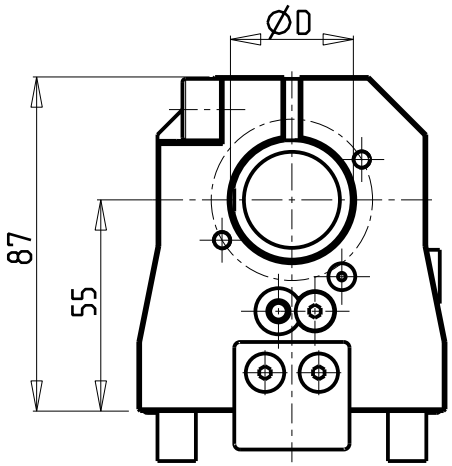

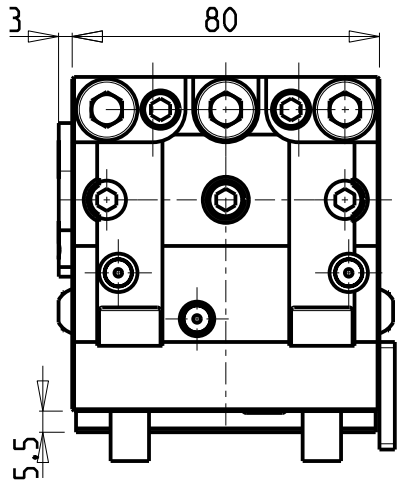

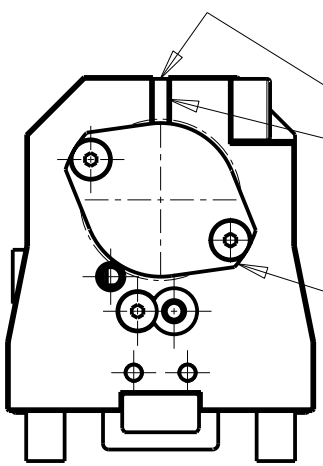

SOLO GUARNIZIONE (OPZIONALE)
ONLY SEAL (OPTIONAL)
NUR DICHTUNG (OPTIONAL)
cod. NKM0110009

KIT ADDUZIONE INTERNA (OPZIONALE)
KIT FOR INTERNAL COOLANT (OPTIONAL)
KIT FUER INTERNE KUEHLMITTELZUFUHR (OPTIONAL)
Ø32-Ø1 1/4" cod. KIT1004001

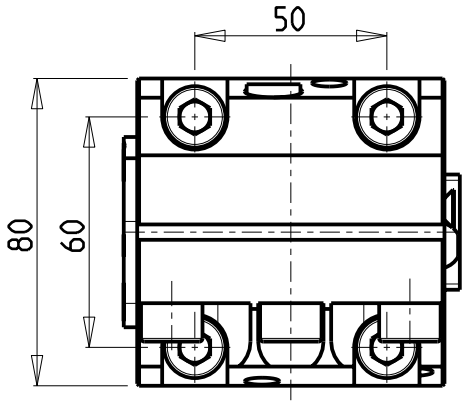

PER BOCCOLE DI RIDUZIONE VEDI PAG. TBL150-1-00
FOR REDUCING BUSHINGS SEE PAGE TBL150-1-00
FUR REDUZIERBUCHSE SIEHE SEITE TBL150-1-00

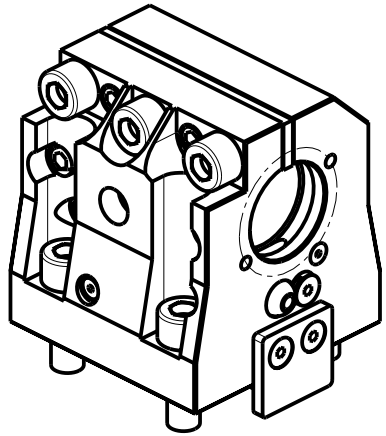

Cod. MT	N°Utensili N°Tools N°Werkzeuge	Reversibile lato mandrino/contromandrino Reversible sub/main spindle side Umkehrbare Spindelseite/ Gegenspindelseite	Lubrificazione int. opzionale Coolant through optional Innenkuehlung Optional	Lubrificazione est. Ext. coolant Aussenkuehlung	Misure Dimensions Masse	D
NKM0113221	1	X	X	X	mm	32
NKM0113231	1	X	X	X	Inch	1 1/4"

CMZ
MOD: TX52 Y3/Y2 QUATTRO/Y2 TWIN - TX66 Y3/Y2 QUATTRO/Y2 TWIN - TTL 52 - TTL 66
TA15-20-25-30M/Y/MS/MY/YS 15 ST.

PORTAUTENSILE ASSIALE SPECIALE PER BARENO Ø32mm / Ø1 1/4" H=55mm
Axial special boring bar holder Ø32mm / Ø1 1/4" H=55mm
Axial spezial Bohrhalter Ø32mm / Ø1 1/4" H=55mm

M.T. srl
Via Casino Albini 480
Tel. 0541/956034-957884
Fax 0541/956341
47842 S. GIOVANNI IN M. (RN)
e-mail: mtma@mtmarchetti.com
http://www.mtmarchetti.com

Subject to change without notice.

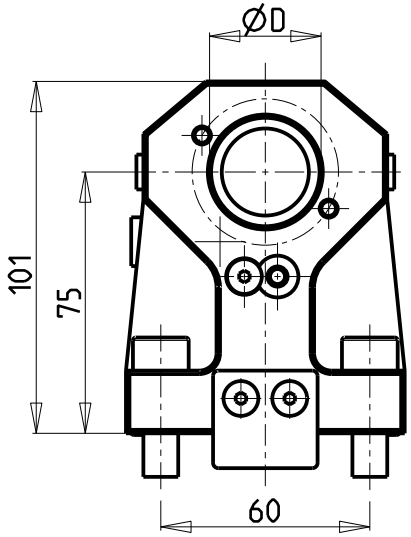

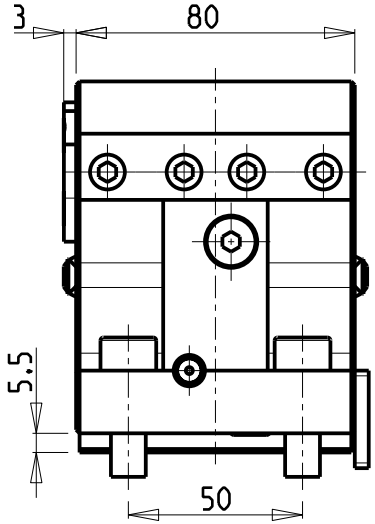

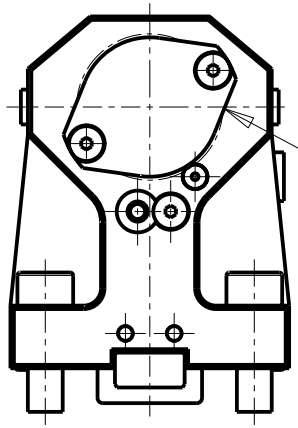

KIT ADDUZIONE INTERNA (OPZIONALE)
KIT FOR INTERNAL COOLANT (OPTIONAL)
KIT FUER INTERNE KUEHLMITTELZUFUHR (OPTIONAL)
Ø32-Ø1 1/4" cod. KIT1000001
Ø40 cod. KIT1000018

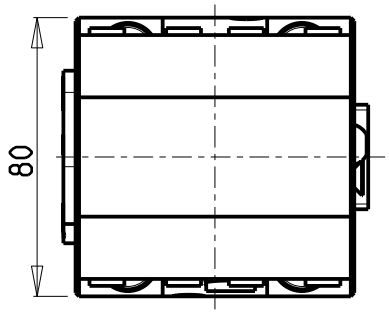

PER BOCCOLE DI RIDUZIONE VEDI PAG. TBL150-1-00
FOR REDUCING BUSHINGS SEE PAGE TBL150-1-00
FUR REDUZIERBUCHSE SIEHE SEITE TBL150-1-00

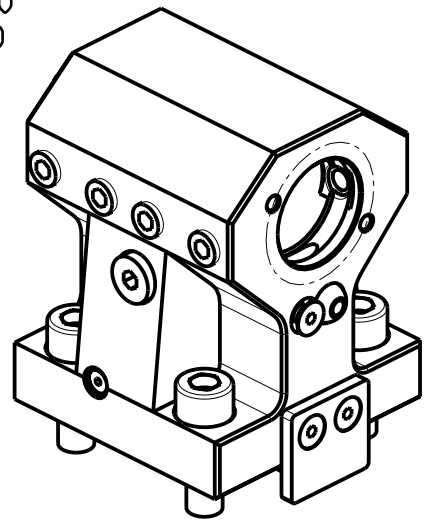

Cod. MT	N°Utensili N°Tools N°Werkzeuge	Reversibile lato mandrino/contromandrino Reversible sub/main spindle side Umkehrbare Spindelseite/ Gegenspindelseite	Lubrificazione int. opzionale Coolant through optional Innenkuehlung Optional	Lubrificazione est. Ext. coolant Aussenkuehlung	Misure Dimensions Masse	D
NKM0114000	1	X	X	X	mm	40
NKM0113200	1	X	X	X	mm	32
NKM0113210	1	X	X	X	Inch	1 1/4"

CMZ
MOD: TX52 Y3/Y2 QUATTRO/Y2 TWIN - TX66 Y3/Y2 QUATTRO/Y2 TWIN - TTL 52 - TTL 66
TA15-20-25-30M/Y/MS/MY/YS 15 ST.

PORTAUTENSILE ASSIALE PER BARENO Ø40mm / Ø32mm / Ø1 1/4" H=75mm
Axial single boring bar holder Ø40mm / Ø32mm / Ø1 1/4" H=75mm
Axial Bohrhalter Ø40mm / Ø32mm / Ø1 1/4" H=75mm

M.T. srl
Via Casino Albini 480
Tel. 0541/956034-957884
Fax 0541/956341
47842 S. GIOVANNI IN M. (RN)
e-mail: mtma@mtmarchetti.com
http://www.mtmarchetti.com

Subject to change without notice.

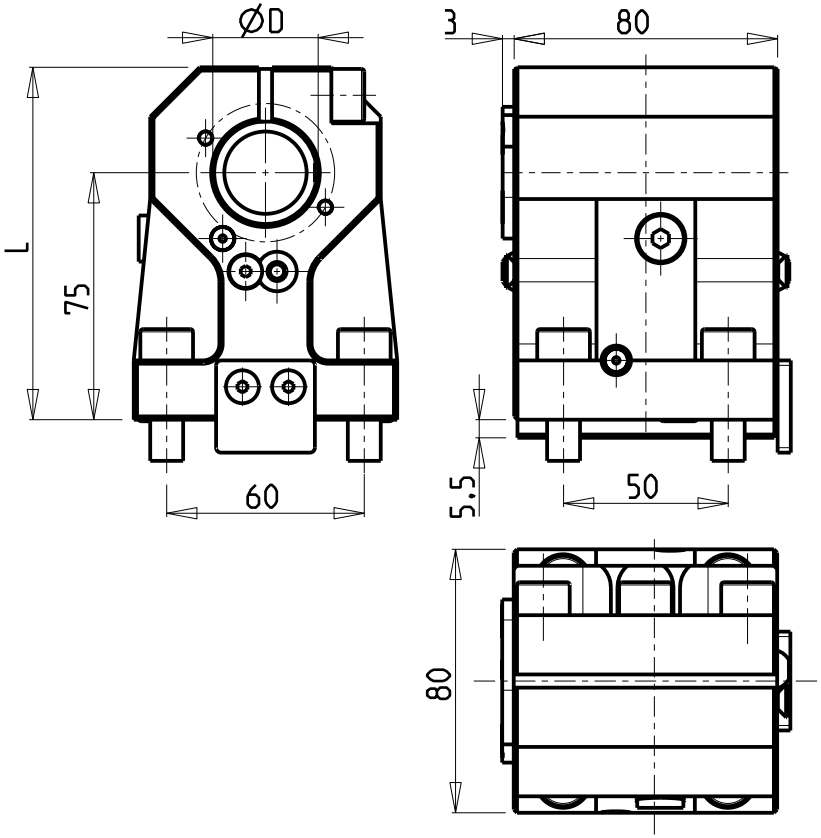

SOLO GUARNIZIONE (OPZIONALE)
ONLY SEAL (OPTIONAL)
NUR DICHTUNG (OPTIONAL)
cod. NKM0110009

KIT ADDUZIONE INTERNA (OPZIONALE)
KIT FOR INTERNAL COOLANT (OPTIONAL)
KIT FUER INTERNE KUEHLMITTELZUFUHR (OPTIONAL)
Ø32-Ø1 1/4" cod. KIT1004001
Ø40 cod. KIT1004018
Ø1 1/2" cod. KIT1004021

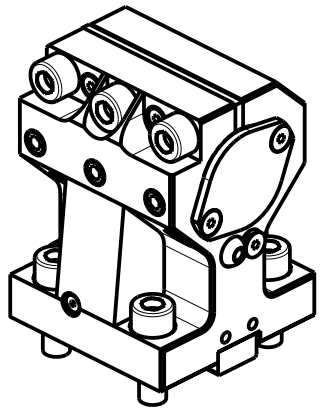

PER BOCCOLE DI RIDUZIONE VEDI PAG. TBL150-1-00
FOR REDUCING BUSHINGS SEE PAGE TBL150-1-00
FUR REDUZIERBUCHSE SIEHE SEITE TBL150-1-00

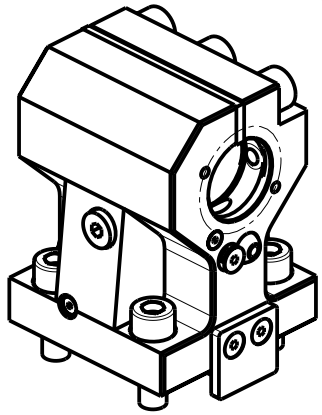

Cod. MT	Reversibile lato mandrino/contromandrino Reversible sub/main spindle side Umkehrbare Spindelseite/ Gegenspindelseite	Lubrificazione int. opzionale Coolant through optional Innenkuehlung Optional	Lubrificazione est. Ext. coolant Aussenkuehlung	D	L
NKM0114010	X	X	X	40	111
NKM0114030	X	X	X	1 1/2"	111
NKM0113201	X	X	X	32	107
NKM0113211	X	X	X	1 1/4"	107

CMZ

MOD: TX52 Y3/Y2 QUATTRO/Y2 TWIN - TX66 Y3/Y2 QUATTRO/Y2 TWIN - TTL 52 - TTL 66

PORTAUTENSILE ASSIALE PER BARENO Ø40mm / Ø1 1/2" / Ø32mm / Ø1 1/4" H=75mm
Axial single boring bar holder Ø40mm / Ø1 1/2" / Ø32mm / Ø1 1/4" H=75mm
Axial Bohrhalter Ø40mm / Ø1 1/2" / Ø32mm / Ø1 1/4" H=75mm

M.T. srl
Via Casino Albini 480
Tel. 0541/956034-957884
Fax 0541/956341
47842 S. GIOVANNI IN M. (RN)
e-mail: mtma@mtmarchetti.com
http://www.mtmarchetti.com

Subject to change without notice.

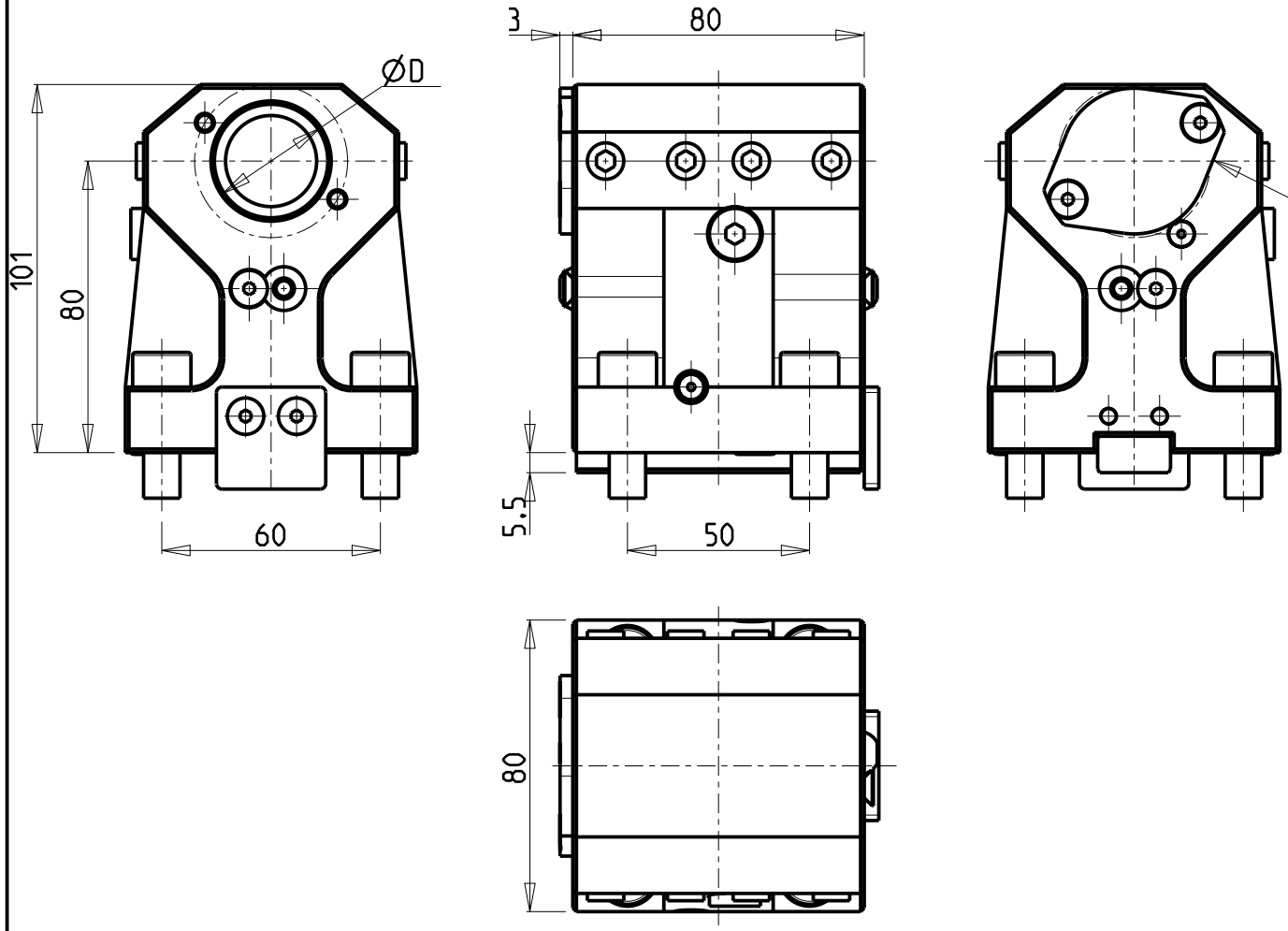

KIT ADDUZIONE INTERNA (OPZIONALE)
KIT FOR INTERNAL COOLANT (OPTIONAL)
KIT FUER INTERNE KUEHLMITTELZUFUHR (OPTIONAL)
Ø32-Ø1 1/4" cod. KIT1000001

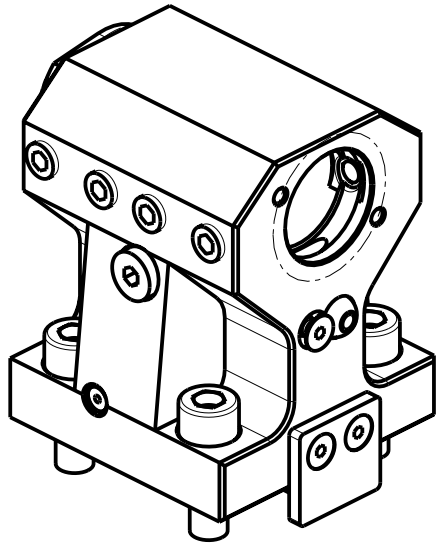

Cod. MT	N°Utensili N°Tools N°Werkzeuge	Reversibile lato mandrino/contromandrino Reversible sub/main spindle side Umkehrbare Spindelseite/ Gegenspindelseite	Lubrificazione int. opzionale Coolant through optional Innenkuehlung Optional	Lubrificazione est. Ext. coolant Aussenkuehlung	Misure Dimensions Masse	D
NKM0113240	1	X	X	X	mm	32

PER BOCCOLE DI RIDUZIONE VEDI PAG. TBL150-1-00
FOR REDUCING BUSHINGS SEE PAGE TBL150-1-00
FUR REDUZIERBUCHSE SIEHE SEITE TBL150-1-00

CMZ
MOD: TX52 Y3/Y2 QUATTRO/Y2 TWIN - TX66 Y3/Y2 QUATTRO/Y2 TWIN - TTL 52 - TTL 66
TA15-20-25-30M/Y/MS/MY/YS 15 ST.

PORTAUTENSILE ASSIALE PER BARENO Ø32mm H=80mm
Axial single boring bar holder Ø32mm H=80mm
Axial Bohrhalter Ø32mm H=80mm

M.T. srl
Via Casino Albini 480
Tel. 0541/956034-957884
Fax 0541/956341
47842 S. GIOVANNI IN M. (RN)
e-mail: mtma@mtmarchetti.com
http://www.mtmarchetti.com

Subject to change without notice.

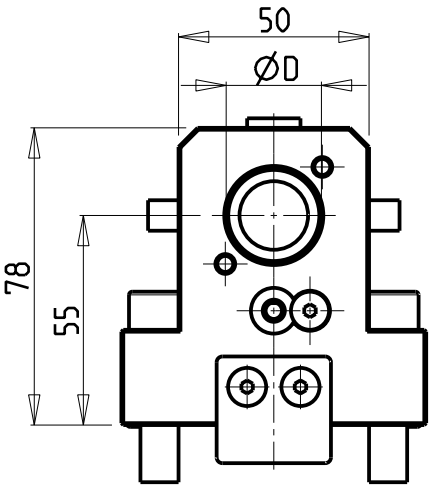

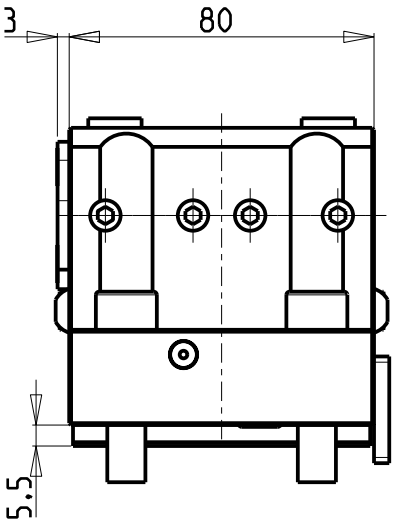

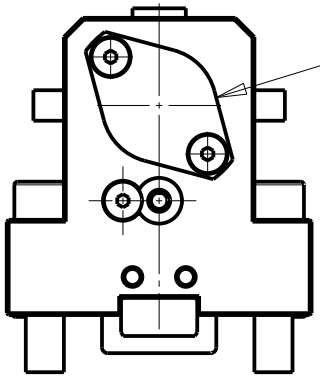

KIT ADDUZIONE INTERNA (OPZIONALE)
KIT FOR INTERNAL COOLANT (OPTIONAL)
KIT FUER INTERNE KUEHLMITTELZUFUHR (OPTIONAL)
Ø25-Ø1" cod. KIT1000006

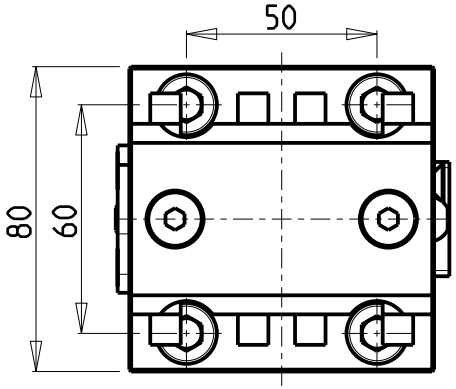

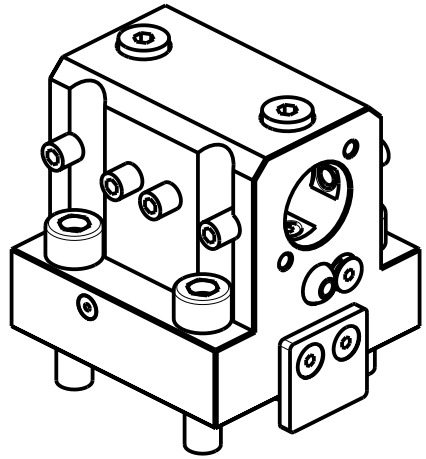

Cod. MT	N°Utensili N°Tools N°Werkzeuge	Reversibile lato mandrino/contromandrino Reversible sub/main spindle side Umkehrbare Spindelseite/ Gegenspindelseite	Lubrificazione int. opzionale Coolant through optional Innenkuehlung Optional	Lubrificazione est. Ext. coolant Aussenkuehlung	Misure Dimensions Masse	D
NKM0112500	1	X	X	X	mm	25
NKM0112510	1	X	X	X	Inch	1"

PER BOCCOLE DI RIDUZIONE VEDI PAG. TBL150-1-00
FOR REDUCING BUSHINGS SEE PAGE TBL150-1-00
FUR REDUZIERBUCHSE SIEHE SEITE TBL150-1-00

CMZ
MOD: TX52 Y3/Y2 QUATTRO/Y2 TWIN - TX66 Y3/Y2 QUATTRO/Y2 TWIN - TTL 52 - TTL 66
TA15-20-25-30M/Y/MS/MY/YS 15 ST.

PORTAUTENSILE ASSIALE PER BARENO Ø25mm / Ø1" H=55mm
Axial single boring bar holder Ø25mm / Ø1" H=55mm
Axial Bohrhalter Ø25mm / Ø1" H=55mm

M.T. srl
Via Casino Albini 480
Tel. 0541/956034-957884
Fax 0541/956341
47842 S. GIOVANNI IN M. (RN)
e-mail: mtma@mtmarchetti.com
http://www.mtmarchetti.com

Subject to change without notice.

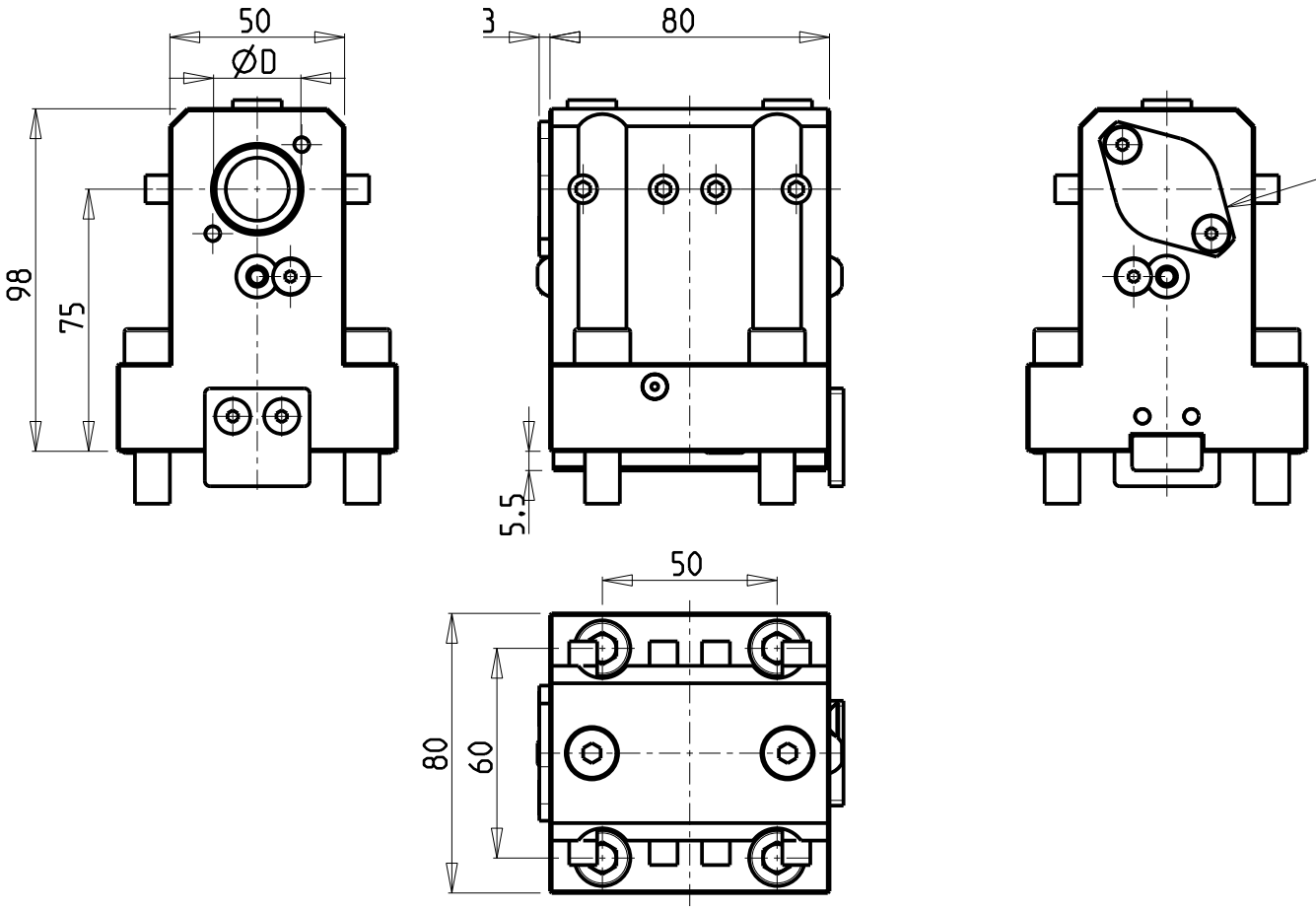

KIT ADDUZIONE INTERNA (OPZIONALE)
KIT FOR INTERNAL COOLANT (OPTIONAL)
KIT FUER INTERNE KUEHLMITTELZUFUHR (OPTIONAL)
Ø25-Ø1" cod. KIT1000006

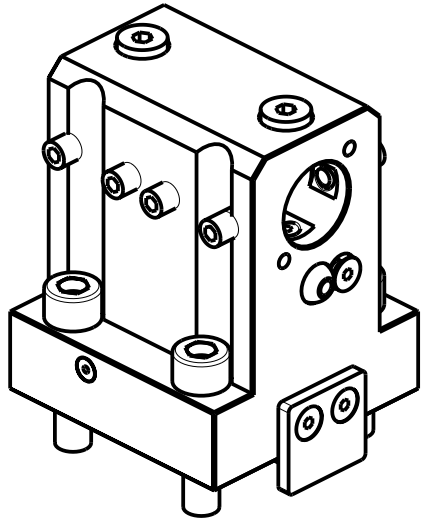

Cod. MT	N°Utensili N°Tools N°Werkzeuge	Reversibile lato mandrino/contromandrino Reversible sub/main spindle side Umkehrbare Spindelseite/ Gegenspindelseite	Lubrificazione int. opzionale Coolant through optional Innenkuehlung Optional	Lubrificazione est. Ext. coolant Aussenkuehlung	Misure Dimensions Masse	D
NKM0112520	1	X	X	X	mm	25
NKM0112530	1	X	X	X	Inch	1"

PER BOCCOLE DI RIDUZIONE VEDI PAG. TBL150-1-00
FOR REDUCING BUSHINGS SEE PAGE TBL150-1-00
FUR REDUZIERBUCHSE SIEHE SEITE TBL150-1-00

CMZ
MOD: TX52 Y3/Y2 QUATTRO/Y2 TWIN - TX66 Y3/Y2 QUATTRO/Y2 TWIN - TTL 52 - TTL 66
TA15-20-25-30M/Y/MS/MY/YS 15 ST.

PORTAUTENSILE ASSIALE PER BARENO Ø25mm / Ø1" H=75mm
Axial single boring bar holder Ø25mm / Ø1" H=75mm
Axial Bohrhalter Ø25mm / Ø1" H=75mm

M.T. srl
Via Casino Albini 480
Tel. 0541/956034-957884
Fax 0541/956341
47842 S. GIOVANNI IN M. (RN)
e-mail: mtma@mtmarchetti.com
http://www.mtmarchetti.com

Subject to change without notice.

KIT ADDUZIONE INTERNA (OPZIONALE)
KIT FOR INTERNAL COOLANT (OPTIONAL)
KIT FUER INTERNE KUEHLMITTELZUFUHR (OPTIONAL)
Ø32 cod. KIT1000001

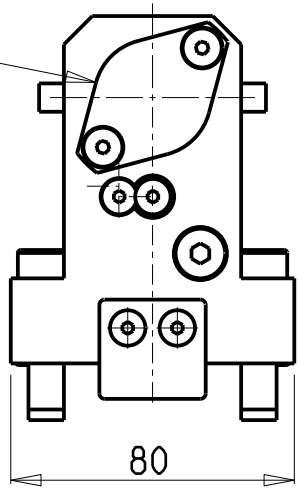

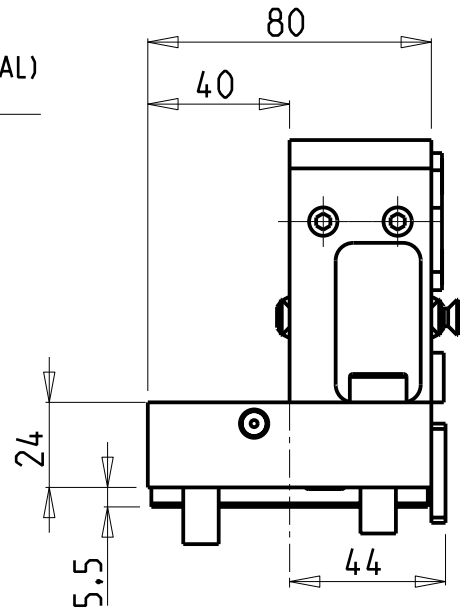

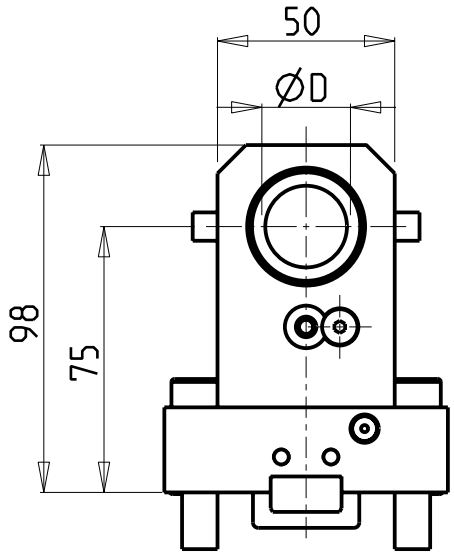

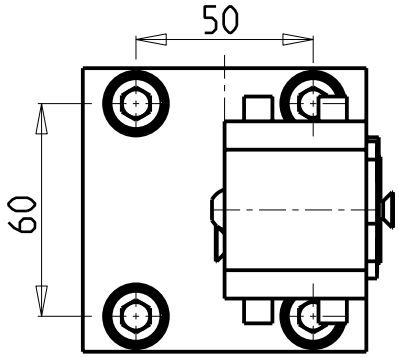

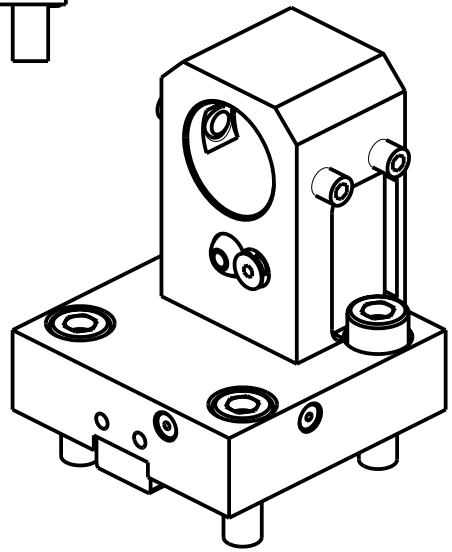

Cod. MT	N°Utensili N°Tools N°Werkzeuge	Reversibile lato mandrino/contromandrino Reversible sub/main spindle side Umkehrbare Spindelseite/ Gegenspindelseite	Lubrificazione int. opzionale Coolant through optional Innenkuehlung Optional	Lubrificazione est. Ext. coolant Aussenkuehlung	Misure Dimensions Masse	D
NKM1363200	1	X	X	X	mm	32

PER BOCCOLE DI RIDUZIONE VEDI PAG. TBL150-1-00
FOR REDUCING BUSHINGS SEE PAGE TBL150-1-00
FUR REDUZIERBUCHSE SIEHE SEITE TBL150-1-00

CMZ
MOD: TX52 Y3/Y2 QUATTRO/Y2 TWIN - TX66 Y3/Y2 QUATTRO/Y2 TWIN - TTL 52 - TTL 66
TA15-20-25-30M/Y/MS/MY/YS 15 ST.

PORTAUTENSILE ASSIALE ARRETRATO PER BARENO Ø32mm H=75mm
Axial single rear set boring bar holder Ø32mm H=75mm
Axial Bohrhalter zurueckversetzt Ø32mm H=75mm

M.T. srl
Via Casino Albini 480
Tel. 0541/956034-957884
Fax 0541/956341
47842 S. GIOVANNI IN M. (RN)
e-mail: mtma@mtmarchetti.com
http://www.mtmarchetti.com

Subject to change without notice.

KIT ADDUZIONE INTERNA (OPZIONALE)
KIT FOR INTERNAL COOLANT (OPTIONAL)
KIT FUER INTERNE KUEHLMITTELZUFUHR (OPTIONAL)
Ø25 cod. KIT1000006

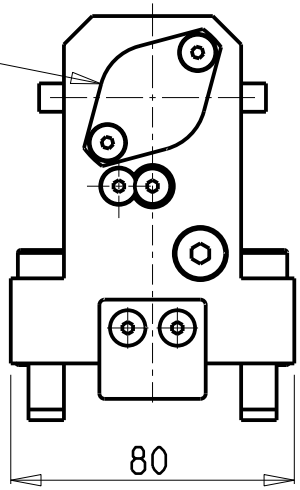

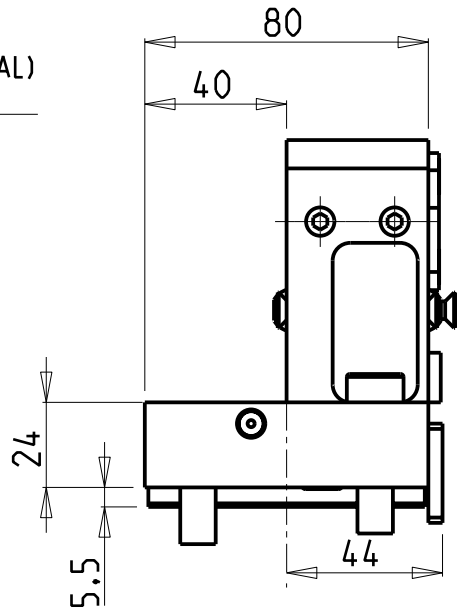

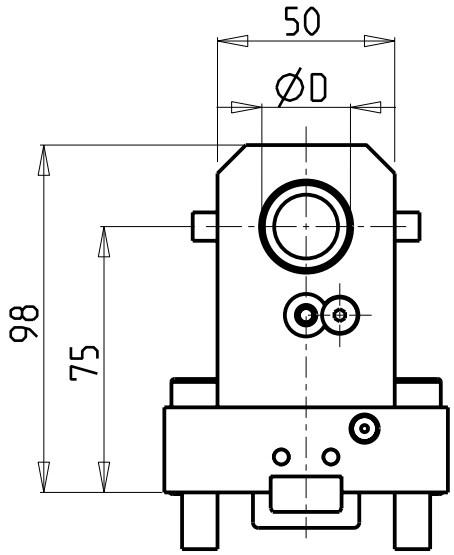

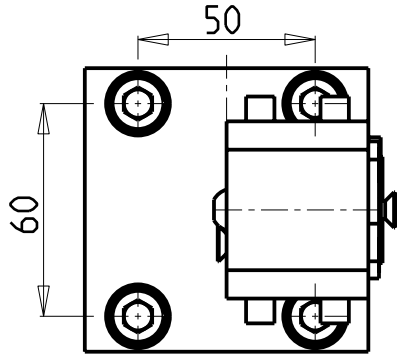

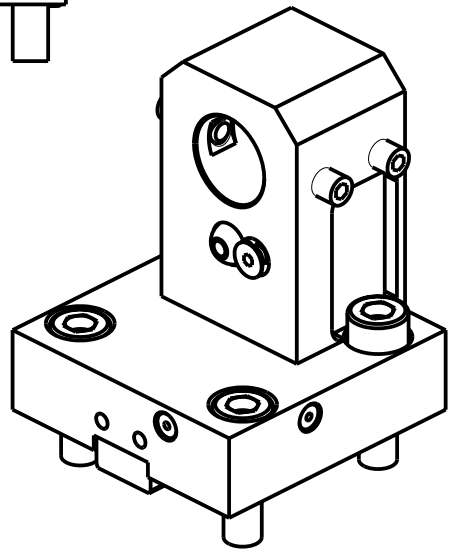

Cod. MT	N°Utensili N°Tools N°Werkzeuge	Reversibile lato mandrino/contromandrino Reversible sub/main spindle side Umkehrbare Spindelseite/ Gegenspindelseite	Lubrificazione int. opzionale Coolant through optional Innenkuehlung Optional	Lubrificazione est. Ext. coolant Aussenkuehlung	Misure Dimensions Masse	D
NKM1362500	1	X	X	X	mm	25

PER BOCCOLE DI RIDUZIONE VEDI PAG. TBL150-1-00
FOR REDUCING BUSHINGS SEE PAGE TBL150-1-00
FUR REDUZIERBUCHSE SIEHE SEITE TBL150-1-00

CMZ
MOD: TX52 Y3/Y2 QUATTRO/Y2 TWIN - TX66 Y3/Y2 QUATTRO/Y2 TWIN - TTL 52 - TTL 66
TA15-20-25-30M/Y/MS/MY/YS 15 ST.

PORTAUTENSILE ASSIALE ARRETRATO PER BARENO Ø25mm H=75mm
Axial single rear set boring bar holder Ø25mm H=75mm
Axial Bohrhalter zurueckversetzt Ø25mm H=75mm

M.T. srl
Via Casino Albini 480
Tel. 0541/956034-957884
Fax 0541/956341
47842 S. GIOVANNI IN M. (RN)
e-mail: mtma@mtmarchetti.com
http://www.mtmarchetti.com

Subject to change without notice.

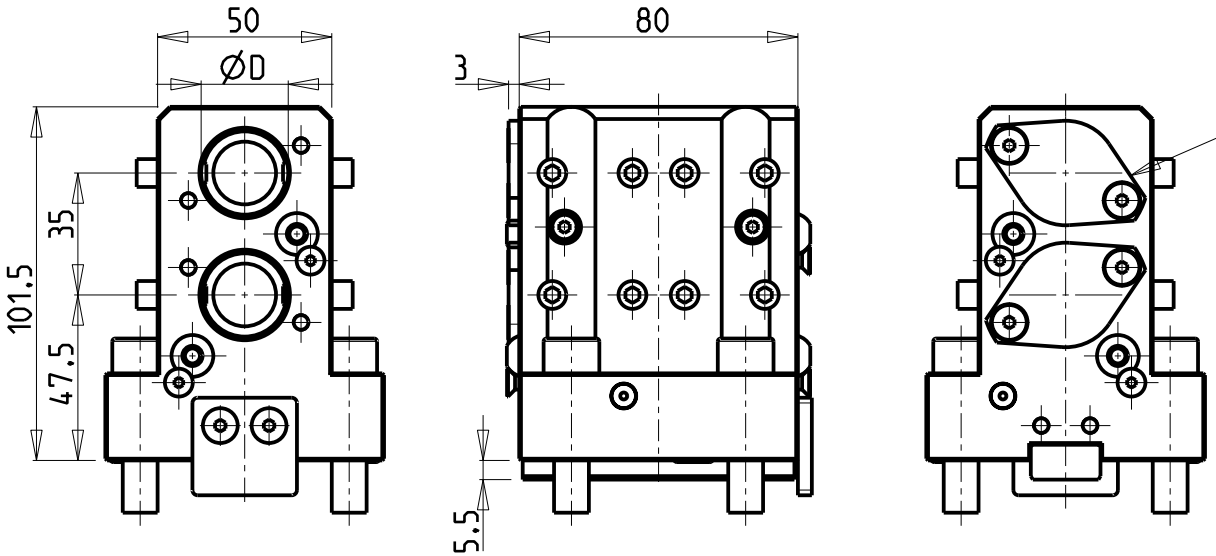

KIT ADDUZIONE INTERNA (OPZIONALE)
KIT FOR INTERNAL COOLANT (OPTIONAL)
KIT FUER INTERNE KUEHLMITTELZUFUHR (OPTIONAL)
Ø25-Ø1" cod. KIT1000006

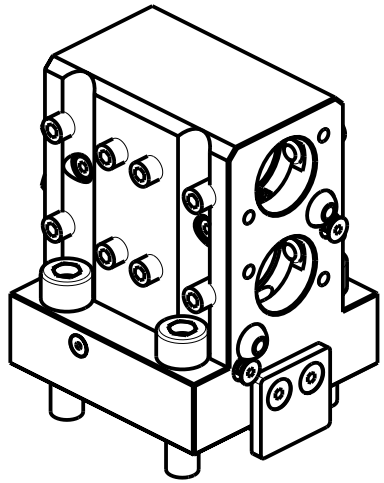

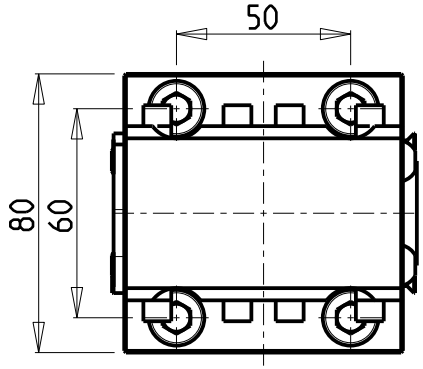

PER BOCCOLE DI RIDUZIONE VEDI PAG. TBL150-1-00
FOR REDUCING BUSHINGS SEE PAGE TBL150-1-00
FUR REDUZIERBUCHSE SIEHE SEITE TBL150-1-00

Cod. MT	N°Utensili N°Tools N°Werkzeuge	Reversibile lato mandrino/contromandrino Reversible sub/main spindle side Umkehrbare Spindelseite/ Gegenspindelseite	Lubrificazione int. opzionale Coolant through optional Innenkuehlung Optional	Lubrificazione est. Ext. coolant Aussenkuehlung	Misure Dimensions Masse	D
NKM0142500	2	X	X	X	mm	25
NKM0142510	2	X	X	X	Inch	1"

CMZ
MOD: TX52 Y3/Y2 QUATTRO/Y2 TWIN - TX66 Y3/Y2 QUATTRO/Y2 TWIN - TTL 52 - TTL 66
TA15-20-25-30M/Y/MS/MY/YS 15 ST.

PORTAUTENSILE ASSIALE PER BARENO 2 POSIZIONI Ø25mm / Ø1"
Axial double boring bar holder Ø25mm / Ø1"
Axial Bohrhalter 2 Positionen Ø25mm / Ø1"

M.T. srl
Via Casino Albini 480
Tel. 0541/956034-957884
Fax 0541/956341
47842 S. GIOVANNI IN M. (RN)
e-mail: mtma@mtmarchetti.com
http://www.mtmarchetti.com

Subject to change without notice.

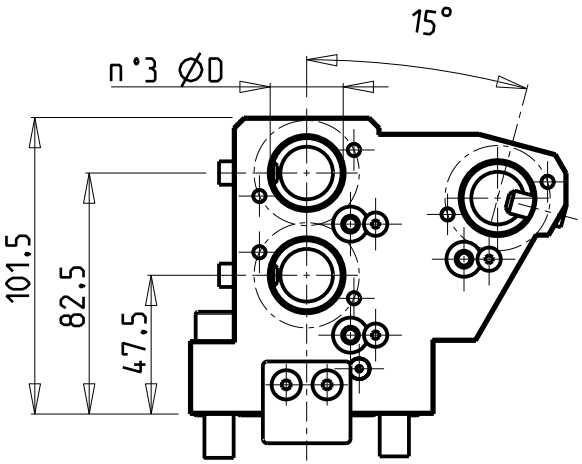

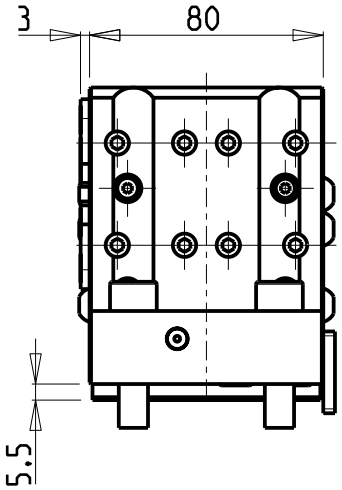

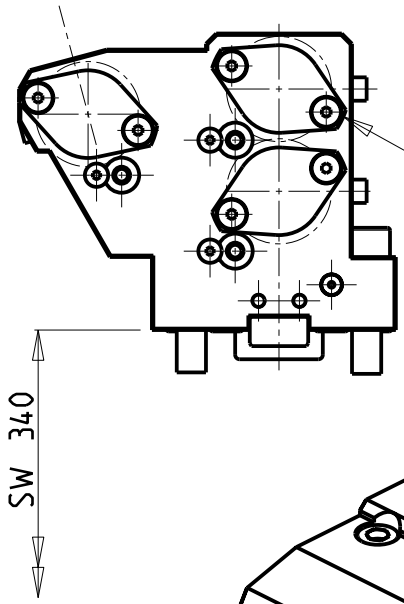

KIT ADDUZIONE INTERNA (OPZIONALE)
KIT FOR INTERNAL COOLANT (OPTIONAL)
KIT FUER INTERNE KUEHLMITTELZUFUHR (OPTIONAL)
Ø25-Ø1" cod. KIT1000006

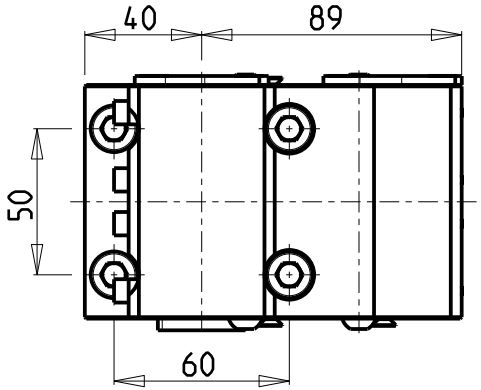

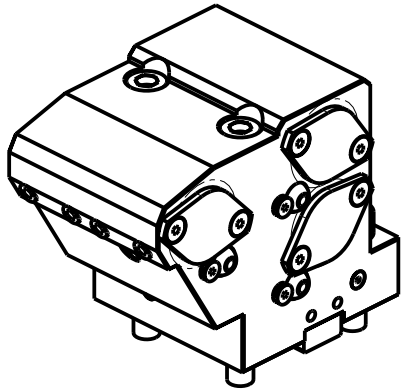

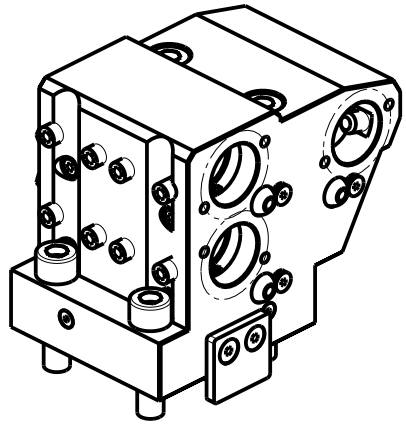

Cod. MT	N°Utensili N°Tools N°Werkzeuge	Lubrificazione int. opzionale Coolant through optional Innenkuehlung Optional	Lubrificazione est. Ext. coolant Aussenkuehlung	Misure Dimensions Masse	D
NKM0211000	3	X	X	mm	25
NKM0212540	3	X	X	Inch	1"

PER BOCCOLE DI RIDUZIONE VEDI PAG. TBL150-1-00
FOR REDUCING BUSHINGS SEE PAGE TBL150-1-00
FUR REDUZIERBUCHSE SIEHE SEITE TBL150-1-00

CMZ

MOD: TX52 Y3/Y2 QUATTRO/Y2 TWIN - TX66 Y3/Y2 QUATTRO/Y2 TWIN - TTL 52 - TTL 66

PORTAUTENSILE ASSIALE PER BARENO 3 POSIZIONI Ø25mm / Ø1"
Axial 3 position boring bar holder Ø25mm / Ø1"
Axial Bohrhalter 3 Positionen Ø25mm / Ø1"

M.T. srl
Via Casino Albini 480
Tel. 0541/956034-957884
Fax 0541/956341
47842 S. GIOVANNI IN M. (RN)
e-mail: mtma@mtmarchetti.com
http://www.mtmarchetti.com

Subject to change without notice.

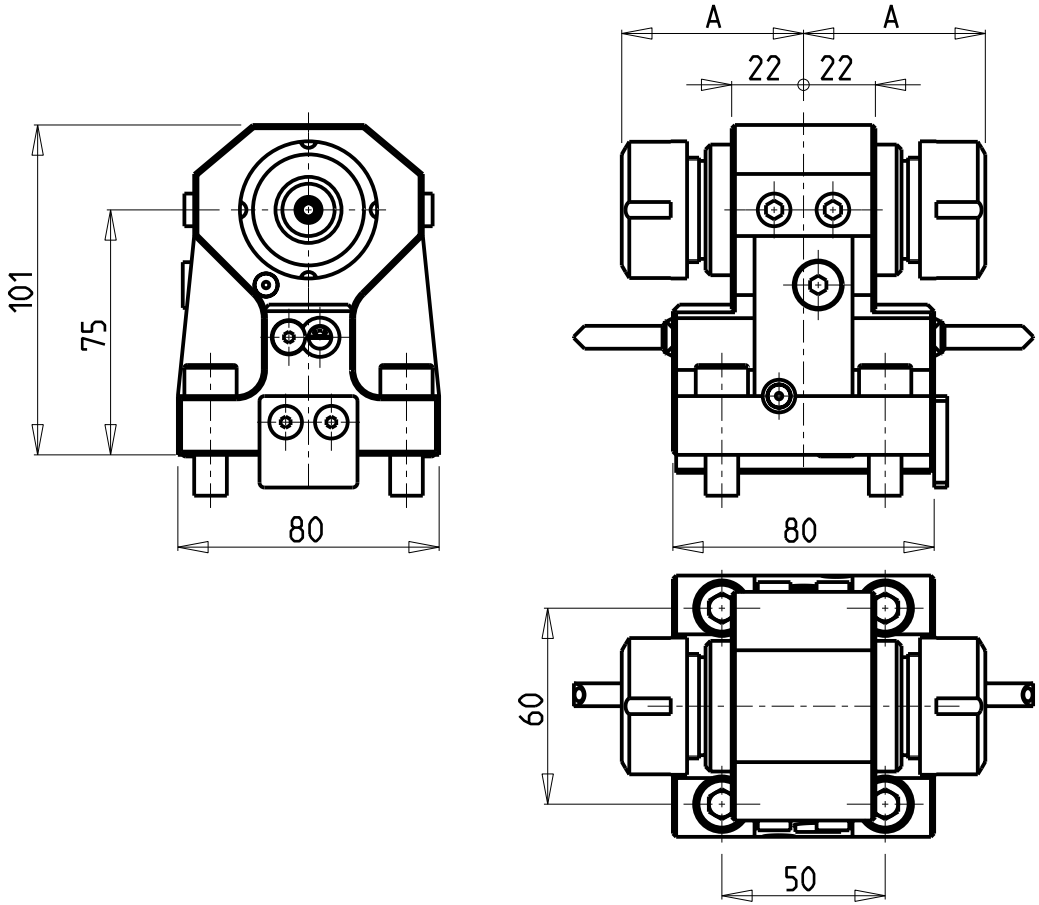

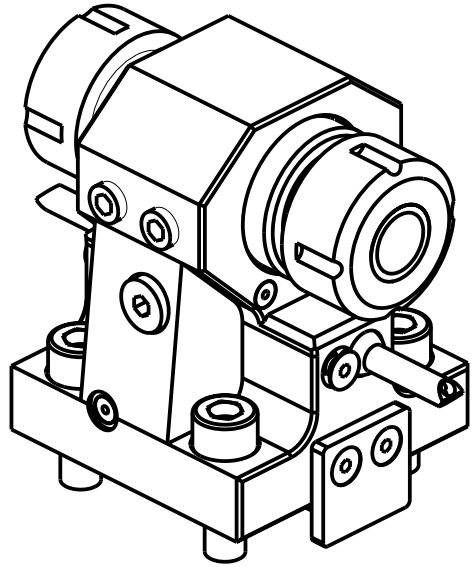

Cod. MT	N°Utensili N°Tools N°Werkzeuge	Mandrino Spindle Spindel	Reversibile lato mandrino/contromandrino Reversible sub/main spindle side Umkehrbare Spindelseite/ Gegenspindelseite	Lubr.interna Coolant through Innenkuehlung	Lubrificazione est. Ext. coolant Aussenkuehlung	A	CHIAVI NON INCLUSE Keys not included Schluessel nicht einbegriffen
NKM1452525	2	ER25+ER25	X	X	X	55.7	CHSTER25
NKM1453232	2	ER32+ER32	X	X	X	69.7	CHSTER32

CMZ

MOD: TX52 Y3/Y2 QUATTRO/Y2 TWIN - TX66 Y3/Y2 QUATTRO/Y2 TWIN - TTL 52 - TTL 66
TA15-20-25-30M/Y/MS/MY/YS 15 ST.

PORTAUTENSILE ASSIALE BISPORGENTE PORTAPINZA H=75mm
Axial double collet chuck holder H=75mm
Axial Doppel-Spannzangenhalter H=75mm

M.T. srl
Via Casino Albini 480
Tel. 0541/956034-957884
Fax 0541/956341
47842 S. GIOVANNI IN M. (RN)
e-mail: mtma@mtmarchetti.com
http://www.mtmarchetti.com

Subject to change without notice.

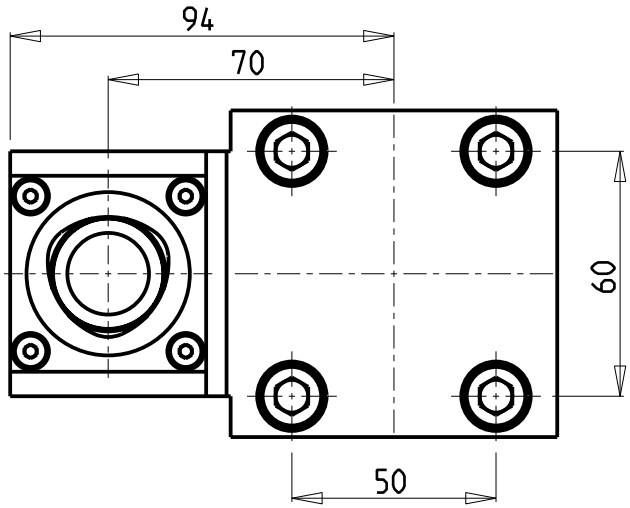

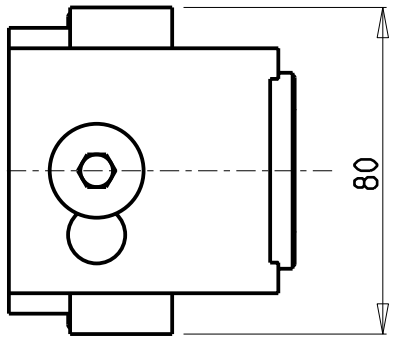

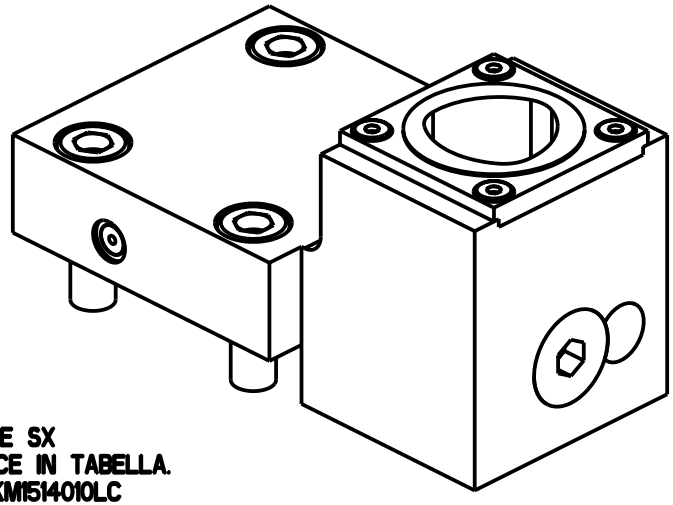

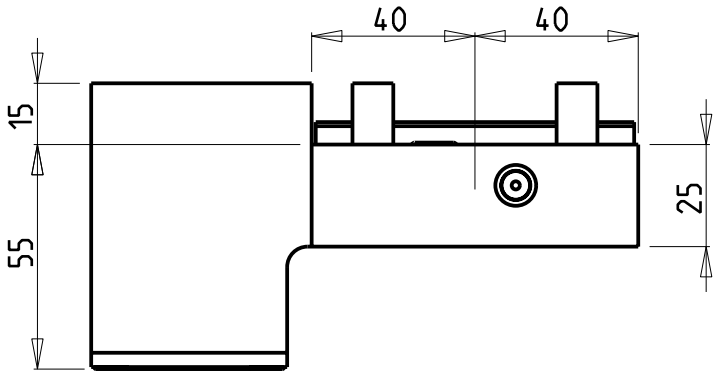

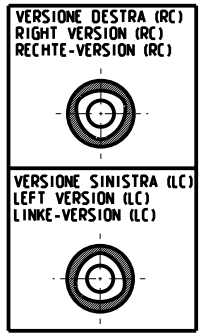

PER ORDINARE LA VERSIONE SX AGGIUNGERE "LC" AL CODICE IN TABELLA.
ES: NKM1514010 DIVENTA NKM1514010LC

TO ORDER LEFT VERSION ADD A "LC" IN THE CODE-CHARTS.
EXAMPLE: NKM1514010 BECOMES NKM1514010LC

UM DIE LINKE-VERSION ZU BESTELLEN, BEI DER ARTIKELBEZEICHNUNG "LC" HINZUFUEGEN.
BEISPIEL: NKM1514010 WIRD DANN NKM1514010LC

Cod. MT	Lubrificazione int. Coolant through Innenkuehlung	Reversibile lato mandrino/contromandrino Reversible sub/main spindle side Umkehrbare Spindelseite/ Gegenspindelseite	TAGLIA Size Masse
NKM1514010	X	X	C4

CMZ
MOD: TX52 Y3/Y2 QUATTRO/Y2 TWIN - TX66 Y3/Y2 QUATTRO/Y2 TWIN - TTL 52 - TTL 66
TA15-20-25-30M/Y/MS/MY/YS 15 ST.

PORTAUTENSILE RADIALE SINGOLO ARRETRATO MT CAPTO
Single rear-set radial static tool MT CAPTO
Radial Single-Werkzeughalter zurueckversetzt MT CAPTO

M.T. srl
Via Casino Albini 480
Tel. 0541/956034-957884
Fax 0541/956341
47842 S. GIOVANNI IN M. (RN)
e-mail: mtma@mtmarchetti.com
http://www.mtmarchetti.com

Subject to change without notice.

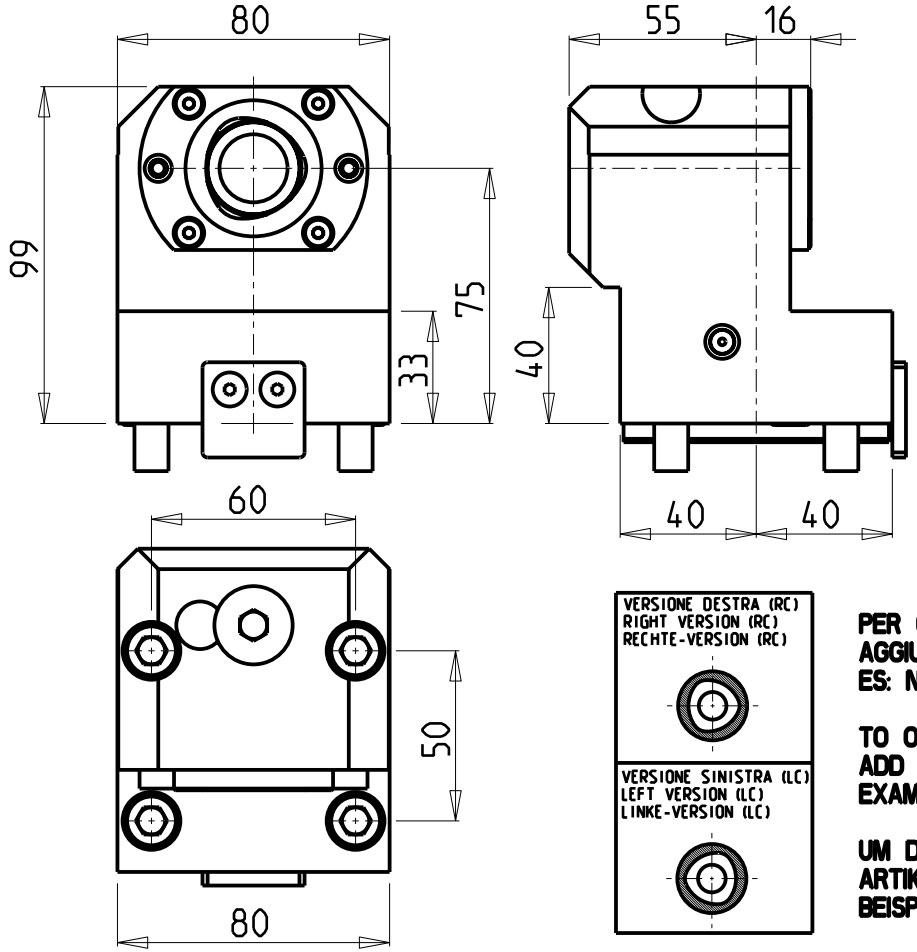

PER ORDINARE LA VERSIONE SX AGGIUNGERE "LC" AL CODICE IN TABELLA.
ES: NKM1524010 DIVENTA NKM1524010LC

TO ORDER LEFT VERSION ADD A "LC" IN THE CODE-CHARTS.
EXAMPLE: NKM1524010 BECOMES NKM1524010LC

UM DIE LINKE-VERSION ZU BESTELLEN, BEI DER ARTIKELBEZEICHNUNG "LC" HINZUFUEGEN.
BEISPIEL: NKM1524010 WIRD DANN NKM1524010LC

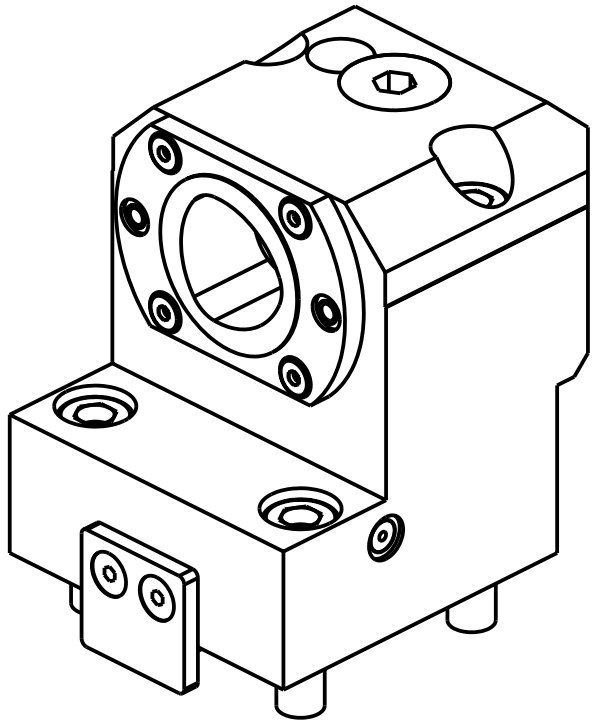

Cod. MT	Lubrificazione int. Coolant through Innenkuehlung	Reversibile lato mandrino/contromandrino Reversible sub/main spindle side Umkehrbare Spindelseite/ Gegenspindelseite	TAGLIA Size Masse
NKM1524010	X	X	C4

CMZ
MOD: TX52 Y3/Y2 QUATTRO/Y2 TWIN - TX66 Y3/Y2 QUATTRO/Y2 TWIN - TTL 52 - TTL 66
TA15-20-25-30M/Y/MS/MY/YS 15 ST.

PORTAUTENSILE ASSIALE SINGOLO ARRETRATO MT CAPTO
Axial rear-set boring single static tool MT CAPTO
Axial Single-Werkzeughalter zurueckversetzt MT CAPTO

M.T. srl
Via Casino Albini 480
Tel. 0541/956034-957884
Fax 0541/956341
47842 S. GIOVANNI IN M. (RN)
e-mail: mtma@mtmarchetti.com
http://www.mtmarchetti.com

Subject to change without notice.

04/2022

ATTENZIONE - ATTENTION - ACHTUNG

- FINO AD ESAURIMENTO SCORTE
- clearance sale
- solange vorrat

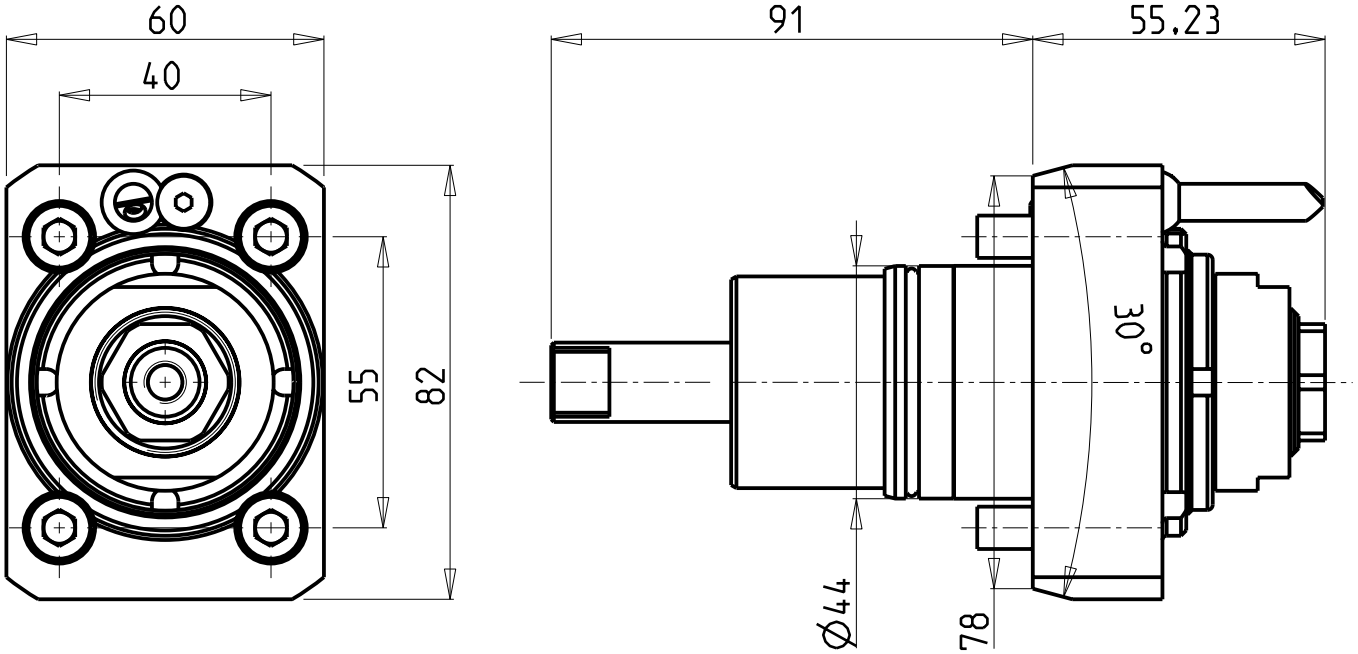

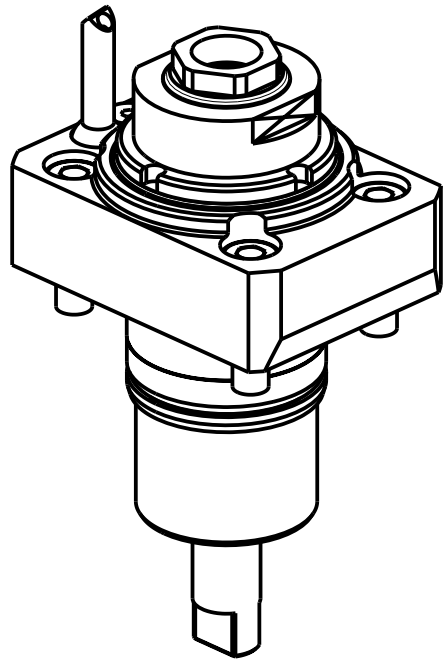

Cod. MT	Mandrino Spindle Spindel	I	RPM	Coppia Max Max Torque Max Drehmoment	Lubrificazione int. Coolant through Innenkuhleung	Lubrificazione est. Ext. coolant Aussenkuehlung	CHIAVI NON INCLUSE Keys not included Schluessel nicht einbegriffen	
NKM0230520	ER A 20	1:1	6000	35Nm	-	X	CHUB36	CHUB22
NKM0230620	ER A 20	1:1	6000	35Nm	P=30bar		CHUB36	CHUB22

CMZ

MOD: TTS 38 - TTS 46 - TTS 52 - TTS 66

MODULO MOTORIZZATO RADIALE
Radial driven tool
Radial angetriebenes Werkzeug

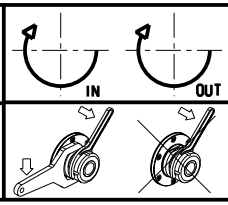

M.T. srl
Via Casino Albini 480
Tel. 0541/956034-957884
Fax 0541/956341
47842 S. GIOVANNI IN M. (RN)
e-mail: mtma@mtmarchetti.com
http://www.mtmarchetti.com

MT®

Subject to change without notice.

04/2022

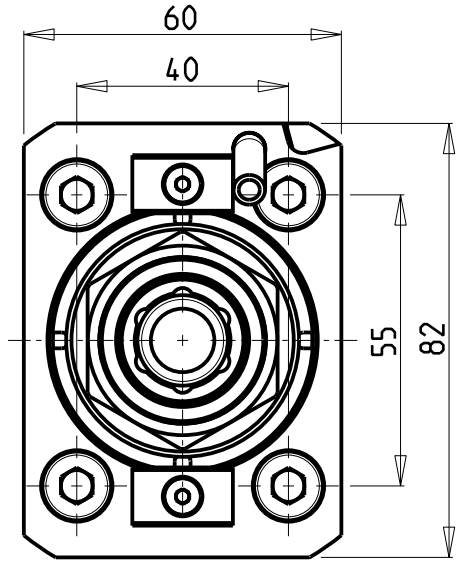

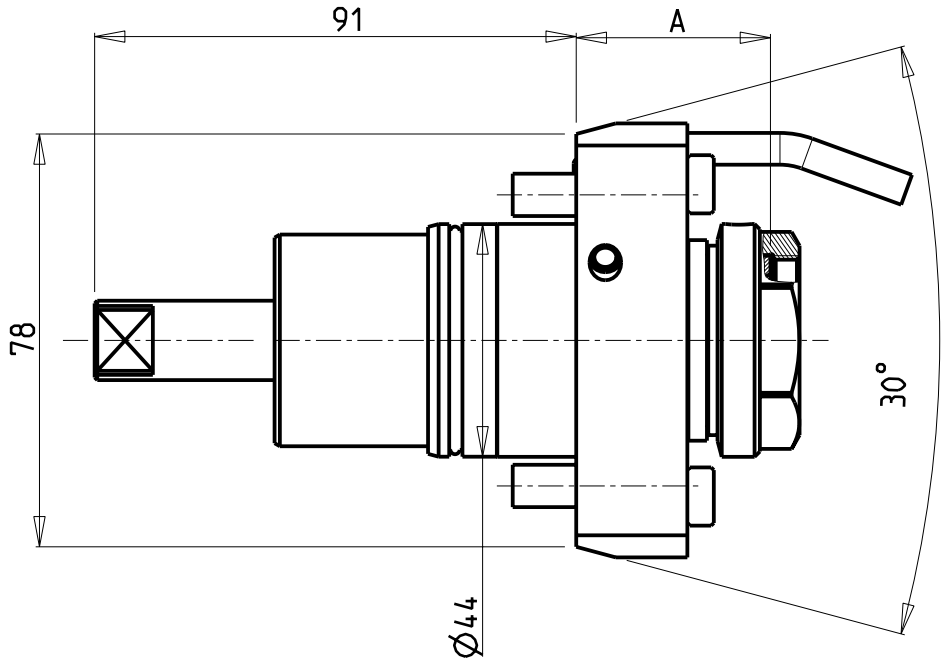

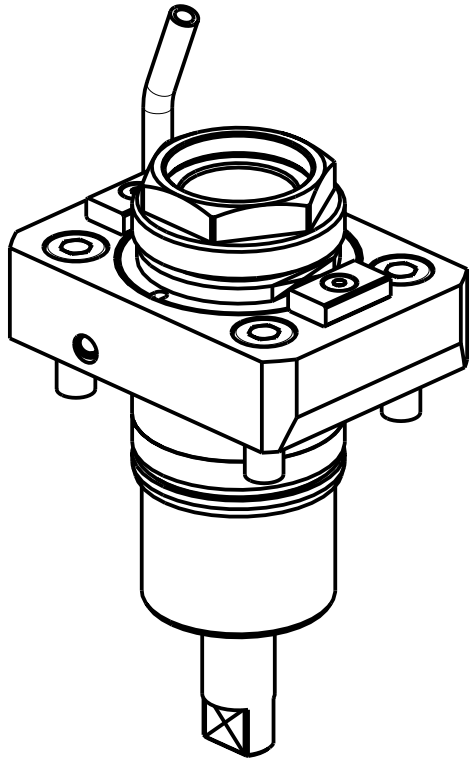

PER PORTAUTENSILI MODULARI MTSK-32 VEDI PAG. TBL300-1-32
FOR MTSK-32 QUIK CHANGE TOOLHOLDERS CLAMPINGS SEE PAGE TBL300-1-32
FUER MTSK-32 MODULARE WERKZEUGAUFNAHMEN SIEHE SEITE TBL300-1-32

Cod. MT	Mandrino Spindle Spindel	I	RPM	Coppia Max Max Torque Max Drehmoment	Lubr.interna Coolant through Innenkuehlung	Lubrificazione est. Ext. coolant Aussenkuehlung	A	CHIAVI NON INCLUSE Keys not included Schluessel nicht einbegriffen	
NKM1190132	MTSK-32	1:1	6000	35Nm	-	X	36.7	CHUB36	OKU0290009 •
NKM1190232	MTSK-32	1:1	6000	35Nm	P=30bar	-	44.7	CHUB36	OKU0290009 •

• Chiave inclusa
• Key included
• Schluessel inbegriffen

CMZ

MOD: TTS 38 - TTS 46 - TTS 52 - TTS 66

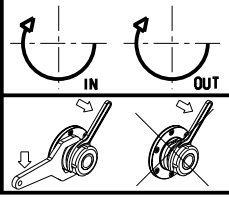

MODULO MOTORIZZATO RADIALE MTSK
Radial MTSK driven tool
Radial MTSK angetriebenes Werkzeug

M.T. srl
Via Casino Albini 480
Tel. 0541/956034-957884
Fax 0541/956341
47842 S. GIOVANNI IN M. (RN)
e-mail: mtma@mtmarchetti.com
http://www.mtmarchetti.com

Subject to change without notice.

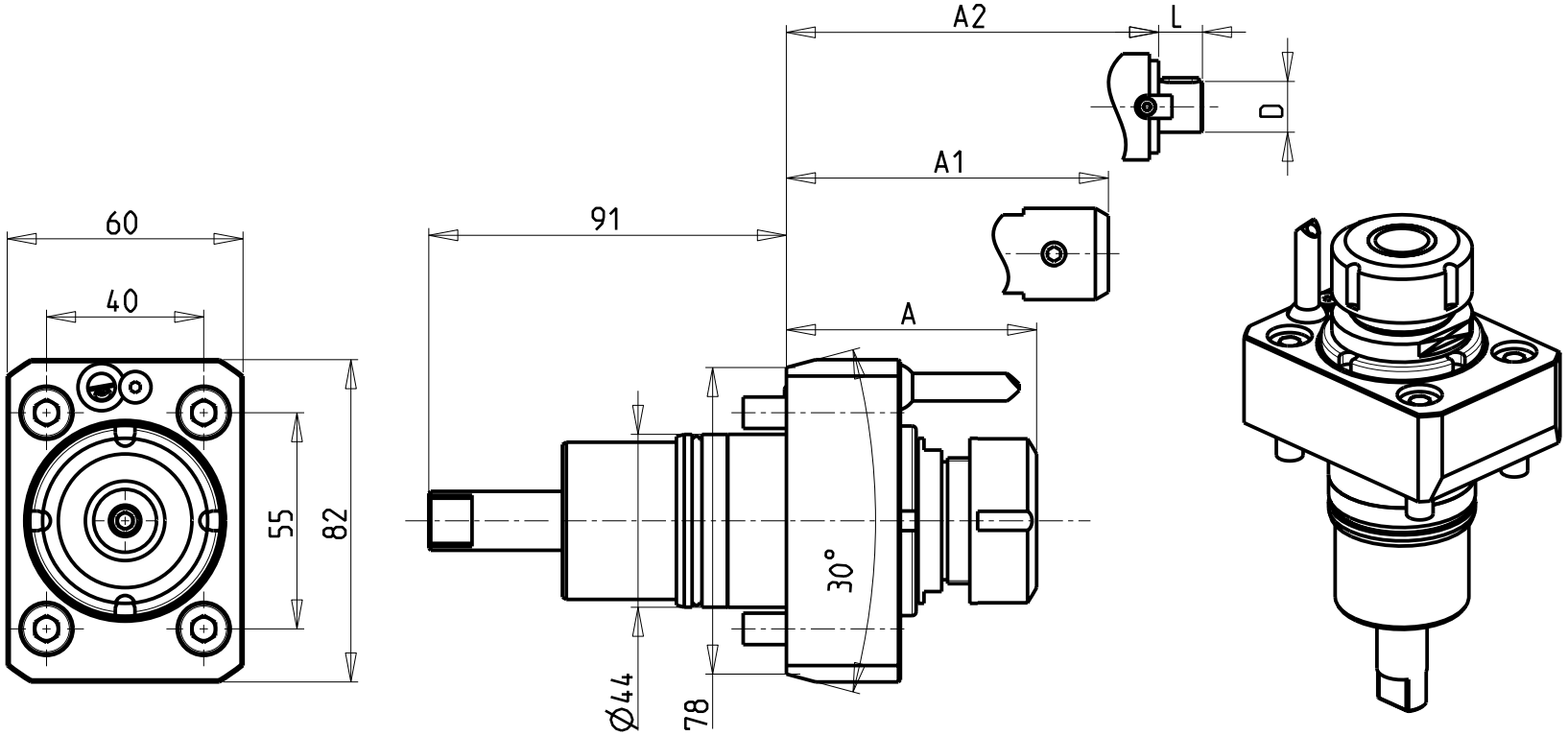

CUSCINETTI MAGGIORATI PER LAVORAZIONI PESANTI

Reinforced bearings for heavy machining

Vergroesserte lager fuer schwerere Bearbeitungen

- Chiave inclusa
- Key included
- Schluessel inbegriffen

Cod. MT	Mandrino Spindle Spindel	I	RPM	Coppia Max Max Torque Max Drehmoment	Lubrificazione int. Coolant through Innenkuhleung	Lubrificazione est. Ext. coolant Aussenkuehlung	A	A1	A2	D	L	CHIAVI NON INCLUSE Keys not included Schluessel nicht einbegriffen		
NKM1790320	ERA20	1:1	6000	35Nm	-	X	50.7	-	-	-	-	OKU0290009 •	CHUB22	NEW
NKM1790420	ERA20	1:1	6000	35Nm	P=70bar	X	58	-	-	-	-	OKU0290009 •	CHUB22	NEW
NKM1790125	ER25	1:1	6000	35Nm	-	X	62.66	-	-	-	-	OKU0290009 •	CHSTER25	
NKM1790225	ER25	1:1	6000	35Nm	P=70bar	X	69.66	-	-	-	-	OKU0290009 •	CHSTER25	NEW
NKM0690316	WELDON 16	1:1	6000	35Nm	-	X	-	50	-	-	-	-	-	
NKM1790516	Ø16x17	1:1	6000	35Nm	-	X	-	-	42.5	16	17	OKU0290009 •	CH_VTCROCE_M08 •	

CMZ

MOD: TTS 38 - TTS 46 - TTS 52 - TTS 66

MODULO MOTORIZZATO RADIALE MAGGIORATO

Radial reinforced driven tool

Radial angetriebenes Werkzeug vergroessert

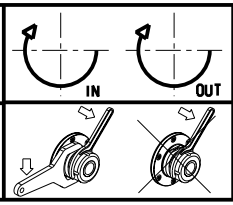

M.T. srl
Via Casino Albini 480
Tel. 0541/956034-957884
Fax 0541/956341
47842 S. GIOVANNI IN M. (RN)
e-mail: mtma@mtmarchetti.com
http://www.mtmarchetti.com

MT®

Subject to change without notice.

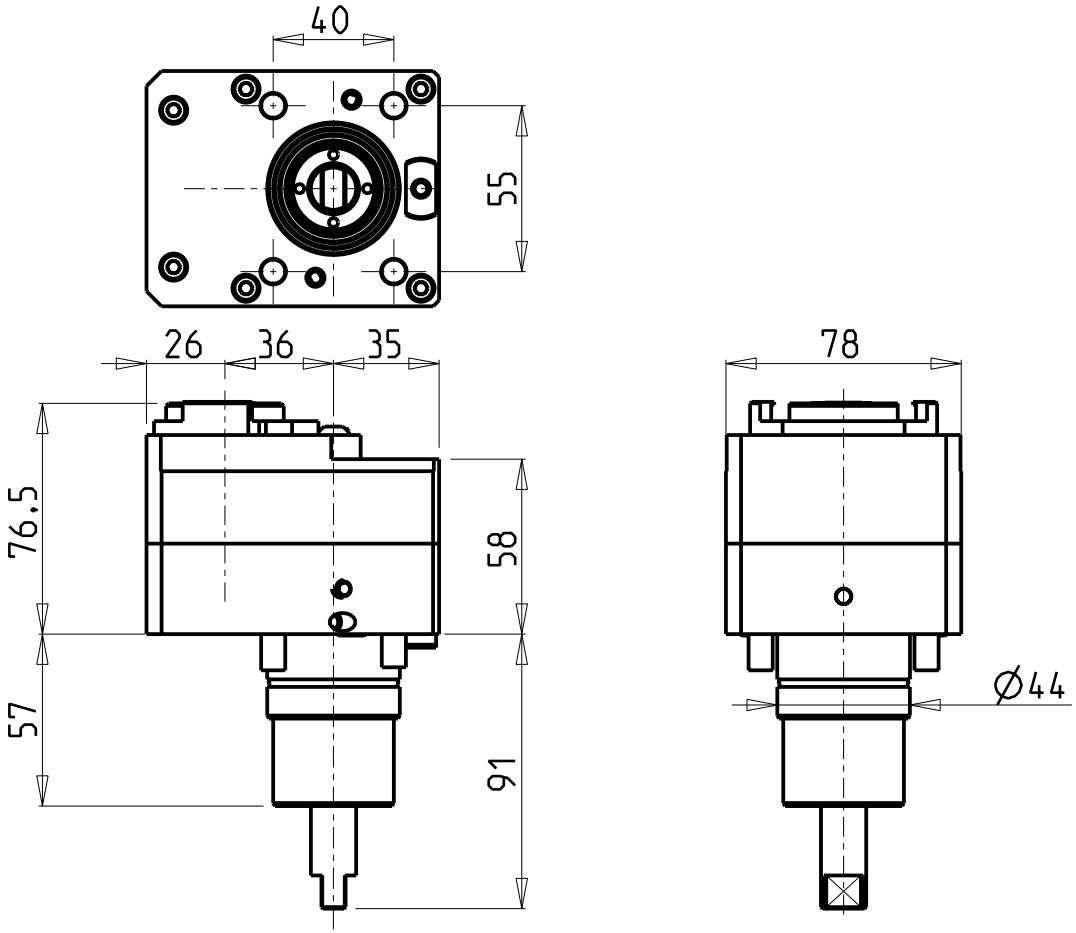

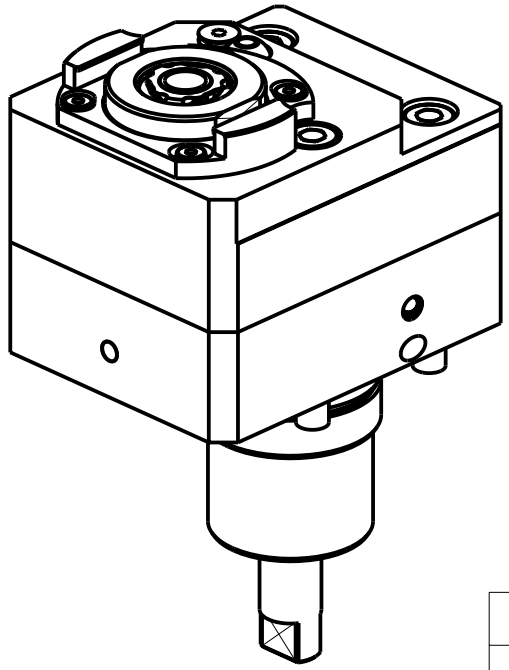

- Chiave inclusa
- Key included
- Schluessel inbegriffen

Cod. MT	Mandrino Spindle Spindel	I	RPM	Coppia Max Max Torque Max Drehmoment	Reversibile lato mandrino/contromandrino Reversible sub/main spindle side Umkehrbare Spindelseite/ Gegenspindelseite	Lubrificazione int. Coolant through Innenkuehlung	Lubrificazione est. Ext. coolant Aussenkuehlung	CHIAVI NON INCLUSE Keys not included Schluessel nicht einbegriffen		
NKM1690316	ERA16	1:1	6000	30Nm	X	–	X	SAU0070027 •	CHUB19_SP3	CHTAER16ZC •
NKM1690416	ERA16	1:1	6000	30Nm	X	P=70bar	X	SAU0070027 •	CHUB19_SP3	CHTAER16ZC •

CMZ

MOD: TTS 38 - TTS 46 - TTS 52 - TTS 66

MODULO MOTORIZZATO RADIALE DISASSATO IN Z 36mm
Radial driven tool re-directed in Z by 36mm
Radial angetriebenes Werkzeug achsversetzt in Z um 36mm

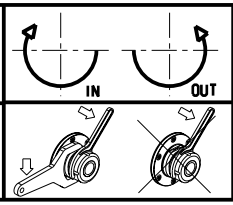

M.T. srl
Via Casino Albini 480
Tel. 0541/956034-957884
Fax 0541/956341
47842 S. GIOVANNI IN M. (RN)
e-mail: mtma@mtmarchetti.com
http://www.mtmarchetti.com

Subject to change without notice.

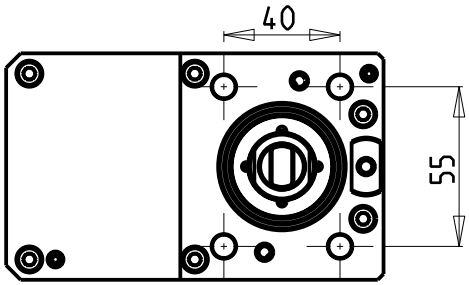

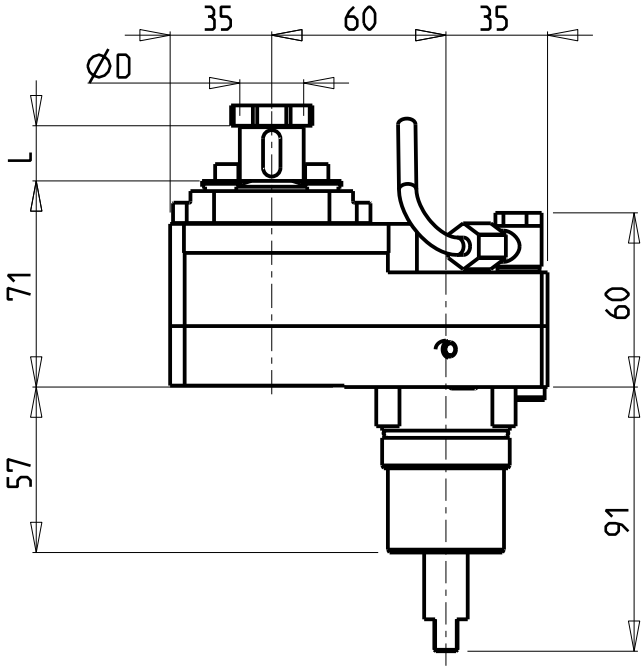

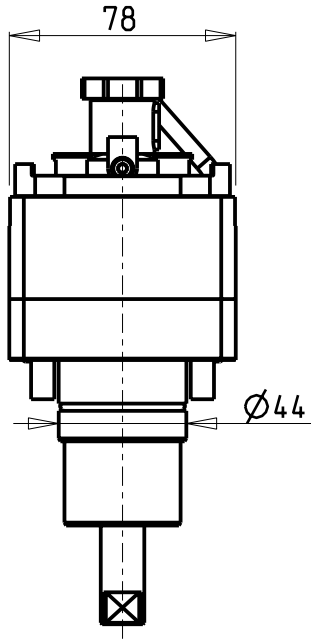

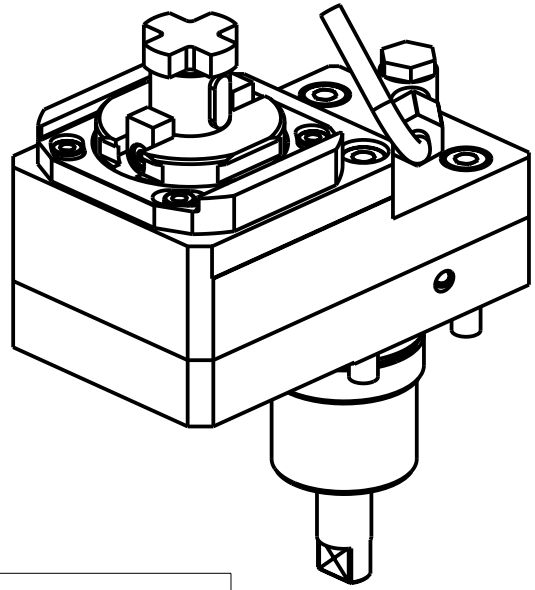

ATTENZIONE - ATTENTION - ACHTUNG

- VERIFICARE LE MISURE DI INGOMBRO PER POSSIBILE INTERFERENZA SU ALCUNI MODELLI DI MACCHINE
- Please check the overall sizes for possible interferences on some machine models
- Bitte überprüfen sie das ausmass um mögliche interferenzen auf einigen maschinen modellen zu vermeiden

Cod. MT	Mandrino Spindle Spindel	I	RPM	Coppia Max Max Torque Max Drehmoment	Reversibile lato mandrino/contromandrino Reversible sub/main spindle side Umkehrbare Spindelseite/ Gegenspindelseite	Lubr.esterna Ext. coolant Aussenkuehlung	D	L	CHIAVI INCLUSE Keys included Schluessel inbegriffen	
NKM1641617	Ø16x17	2:1	3000	40Nm	X	X	16	17	CH_VTCROCE_M08	MNZ0410005
NKM1642219	Ø22x19	2:1	3000	40Nm	X	X	22	19	CH_VTCROCE_M10	MNZ0410005

CMZ

MOD: TTS 38 - TTS 46 - TTS 52 - TTS 66

MODULO MOTORIZZATO RADIALE RIDOTTO I=2:1 DISASSATO IN Z 60mm
Radial geared-down I=2:1 driven tool re-directed in Z by 60mm
Radial angetriebenes Werkzeug untersetzt I=2:1 achsversetzt in Z um 60mm

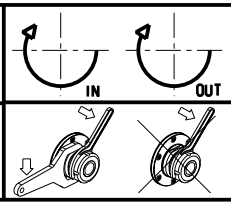

M.T. srl
Via Casino Albini 480
Tel. 0541/956034-957884
Fax 0541/956341
47842 S. GIOVANNI IN M. (RN)
e-mail: mtma@mtmarchetti.com
http://www.mtmarchetti.com

MT®

Subject to change without notice.

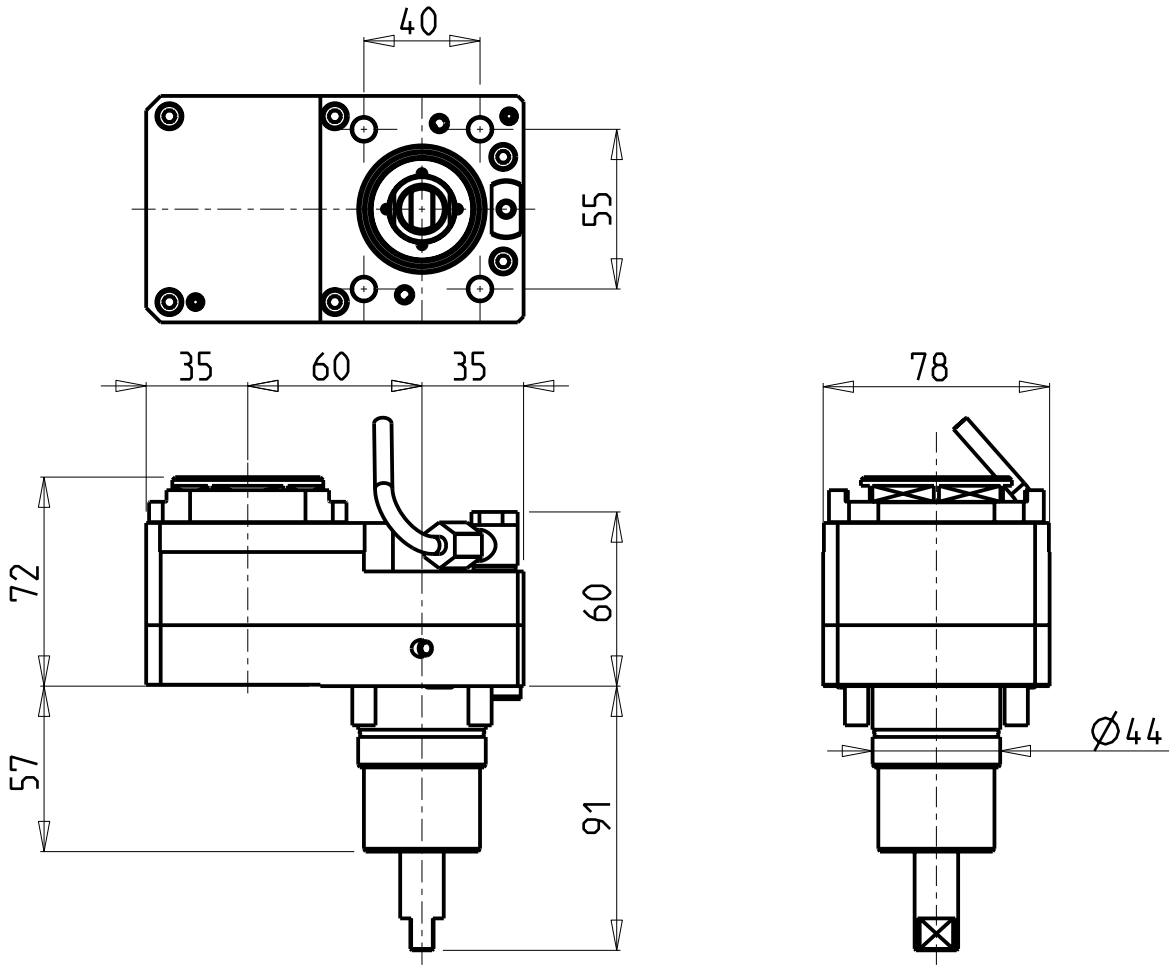

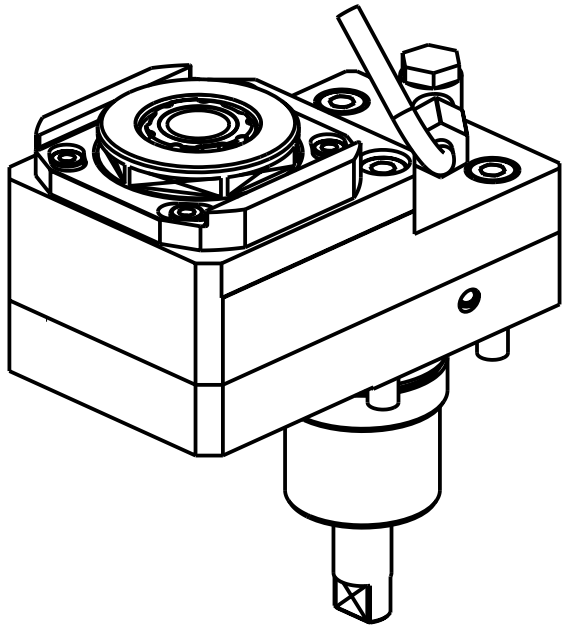

Cod. MT	Mandrino Spindle Spindel	I	RPM	Coppia Max Max Torque Max Drehmoment	Reversibile lato mandrino/contromandrino Reversible sub/main spindle side Umkehrbare Spindelseite/ Gegenspindelseite	Lubr.esterna Ext. coolant Aussenkuehlung	CHIAVI NON INCLUSE Keys not included Schluessel nicht einbegriffen		
NKM1530325	ERA25	3:1	2000	45Nm	X	X	CHUB27	CHTAER25ZC •	MNZ0410005 •

• Chiave inclusa
• Key included
• Schluessel inbegriffen

CMZ

MOD: TTS 38 - TTS 46 - TTS 52 - TTS 66

MODULO MOTORIZZATO RADIALE RIDOTTO I=3:1 DISASSATO IN Z 60mm
Radial geared-down I=3:1 driven tool re-directed in Z by 60mm
Radial angetriebenes Werkzeug untersetzt I=3:1 achsversetzt in Z um 60mm

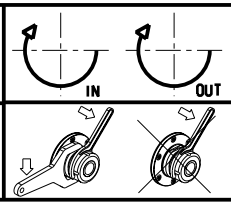

M.T. srl
Via Casino Albini 480
Tel. 0541/956034-957884
Fax 0541/956341
47842 S. GIOVANNI IN M. (RN)
e-mail: mtma@mtmarchetti.com
http://www.mtmarchetti.com

MT®

Subject to change without notice.

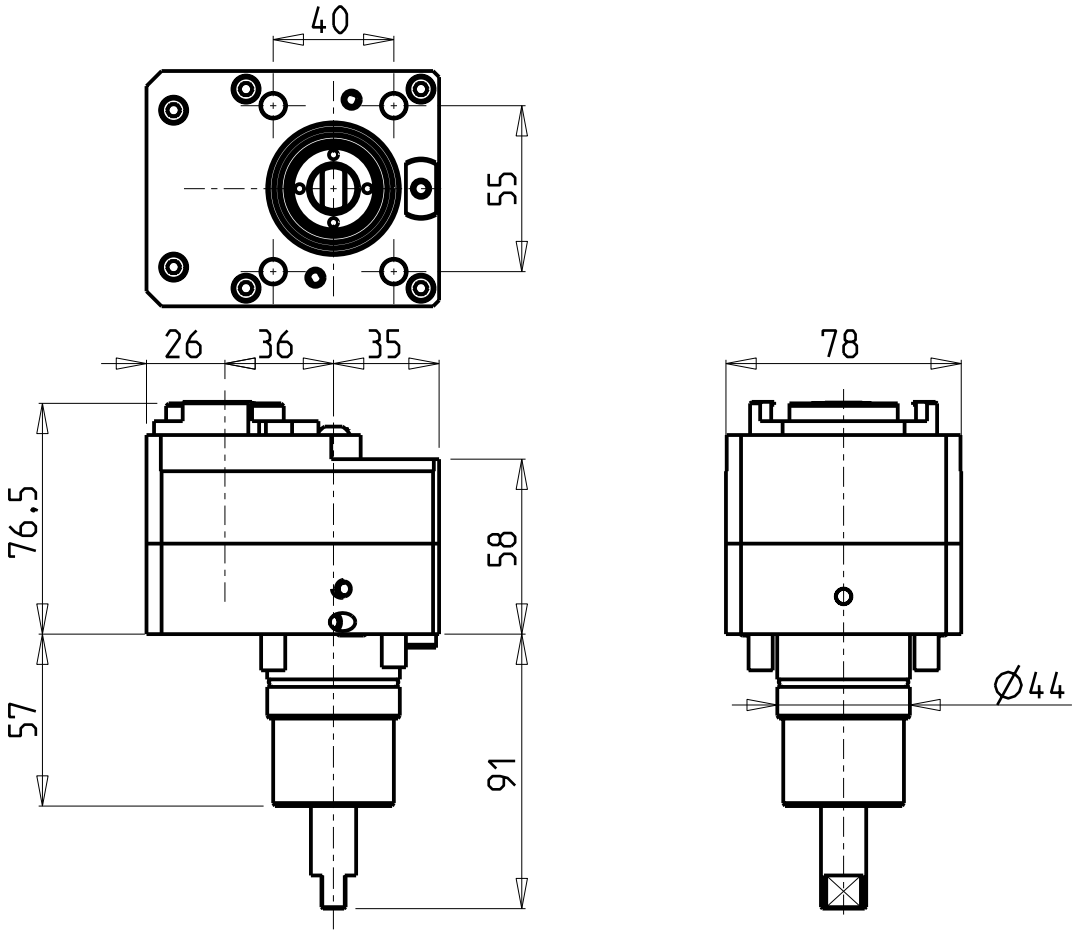

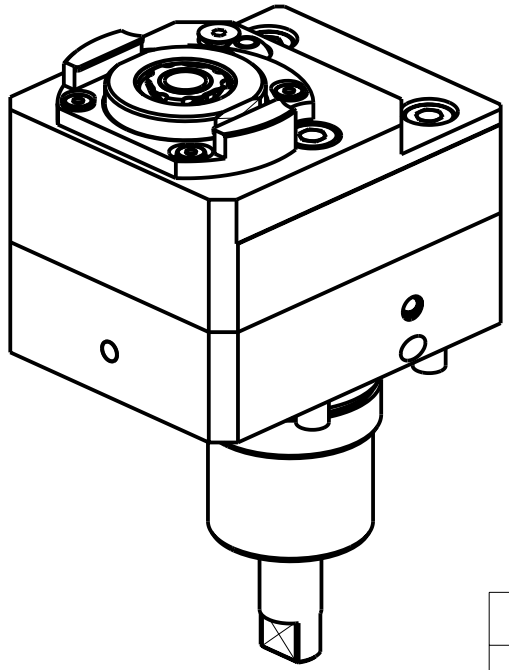

- Chiave inclusa
- Key included
- Schluessel inbegriffen

Cod. MT	Mandrino Spindle Spindel	I	RPM	Coppia Max Max Torque Max Drehmoment	Reversibile lato mandrino/contromandrino Reversible sub/main spindle side Umkehrbare Spindelseite/ Gegenspindelseite	Lubrificazione int. Coolant through Innenkuehlung	Lubrificazione est. Ext. coolant Aussenkuehlung	CHIAVI NON INCLUSE Keys not included Schluessel nicht einbegriffen		
NKM1691316	ERA16	1:2	12000	20Nm	X	-	X	SAU0070027 •	CHUB19_SP3	CHTAER16ZC •
NKM1691416	ERA16	1:2	12000	20Nm	X	P=70bar	X	SAU0070027 •	CHUB19_SP3	CHTAER16ZC •

CMZ

MOD: TTS 38 - TTS 46 - TTS 52 - TTS 66

MODULO MOTORIZZATO RADIALE MOLTIPLICATO I=1:2 DISASSATO IN Z 36mm
Radial geared-up I=1:2 driven tool re-directed in Z by 36mm
Radial angetriebenes Werkzeug uebersetzt I=1:2 achsversetzt in Z um 36mm

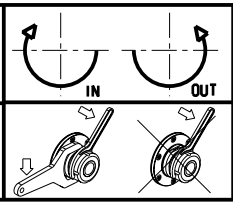

M.T. srl
Via Casino Albini 480
Tel. 0541/956034-957884
Fax 0541/956341
47842 S. GIOVANNI IN M. (RN)
e-mail: mtma@mtmarchetti.com
http://www.mtmarchetti.com

MT®

PAGINA CMZ030-4-30

Subject to change without notice.

04/2022

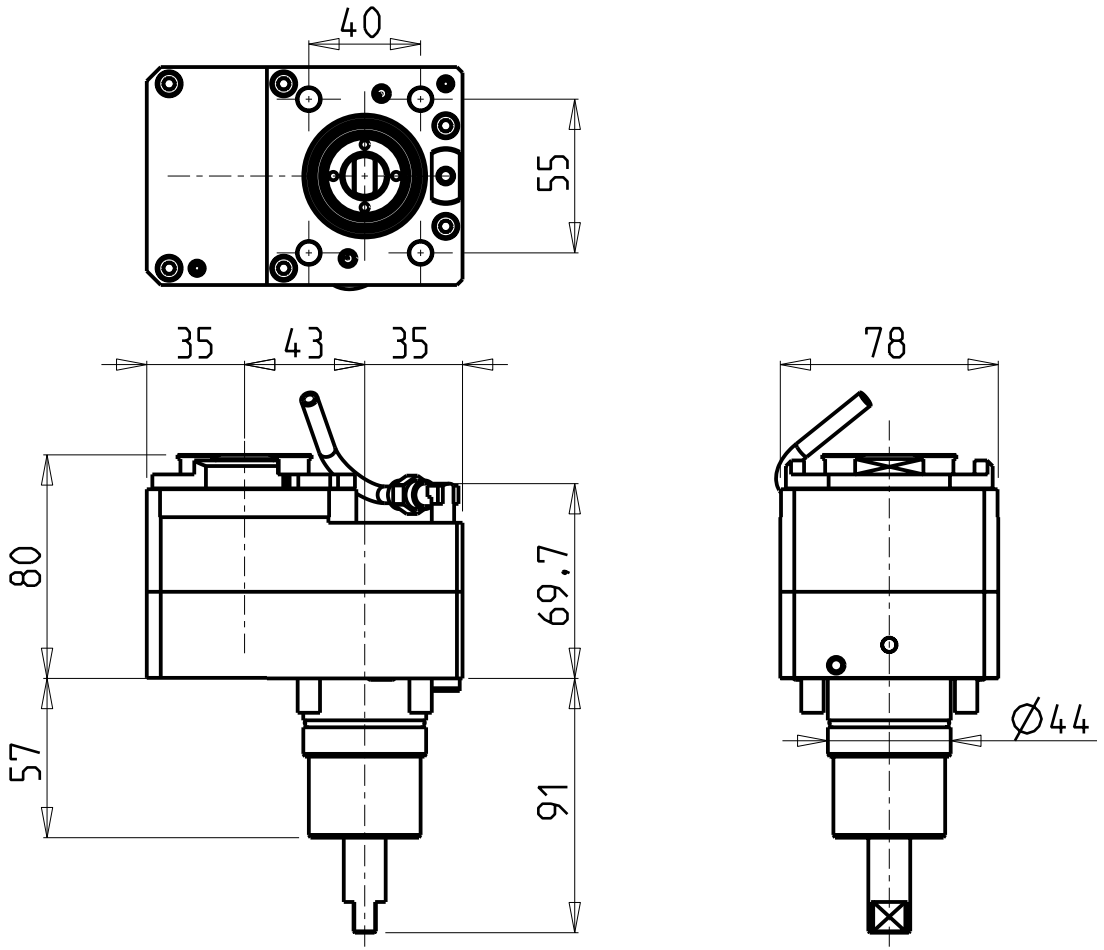

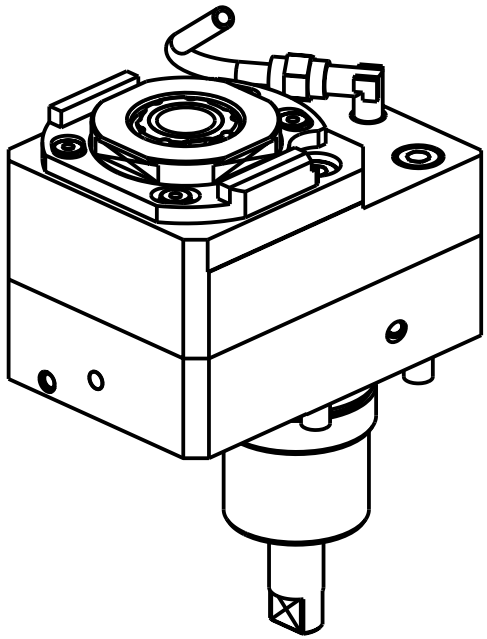

- Chiave inclusa
- Key included
- Schluessel inbegriffen

Cod. MT	Mandrino Spindle Spindel	I	RPM	Coppia Max Max Torque Max Drehmoment	Reversibile lato mandrino/contromandrino Reversible sub/main spindle side Umkehrbare Spindelseite/ Gegenspindelseite	Lubrificazione int. Coolant through Innenkuehlung	Lubr.esterna Ext. coolant Aussenkuehlung	CHIAVI NON INCLUSE Keys not included Schluessel nicht einbegriffen		
NKM1580325	ERA25	2:1	3000	40Nm	X	-	X	CHUB27	CHTAER25ZC •	MNZ0410005 •
NKM1580425	ERA25	2:1	3000	40Nm	X	P=70bar	X	CHUB27	CHTAER25ZC •	MNZ0410005 •

CMZ

MOD: TTS 38 - TTS 46 - TTS 52 - TTS 66

MODULO MOTORIZZATO RADIALE RIDOTTO I=2:1 DISASSATO IN Z 43mm
Radial geared-down I=2:1 driven tool re-directed in Z by 43mm
Radial angetriebenes Werkzeug untersetzt I=2:1 achsversetzt in Z um 43mm

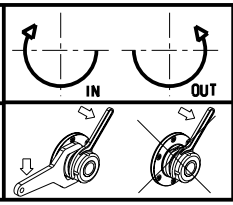

M.T. srl
Via Casino Albini 480
Tel. 0541/956034-957884
Fax 0541/956341
47842 S. GIOVANNI IN M. (RN)
e-mail: mtma@mtmarchetti.com
http://www.mtmarchetti.com

MT®

Subject to change without notice.

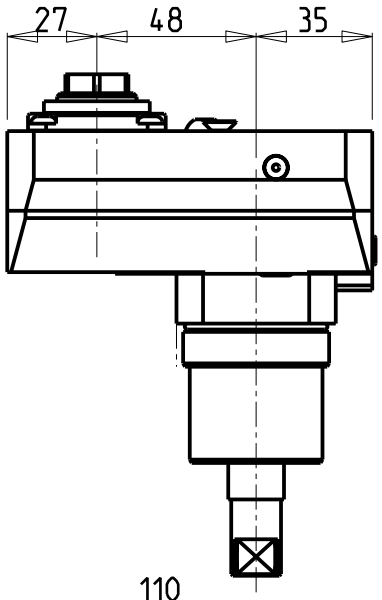

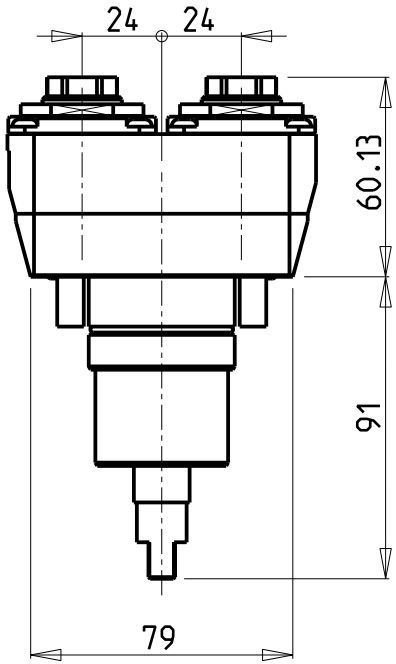

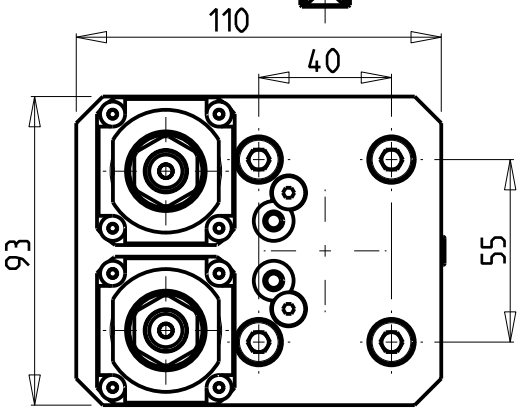

ATTENZIONE - ATTENTION - ACHTUNG

- Per lo smontaggio degli utensili utilizzare sempre la chiave di contrasto come indicato nel manuale d'uso.
- For disassembly of the tools use always the contrast key as mentioned in the user instructions.
- Fuer das Abmontieren der Werkzeuge immer den Gegenschluessel benutzen wie in der Bedienungsanleitung erwaehnt.

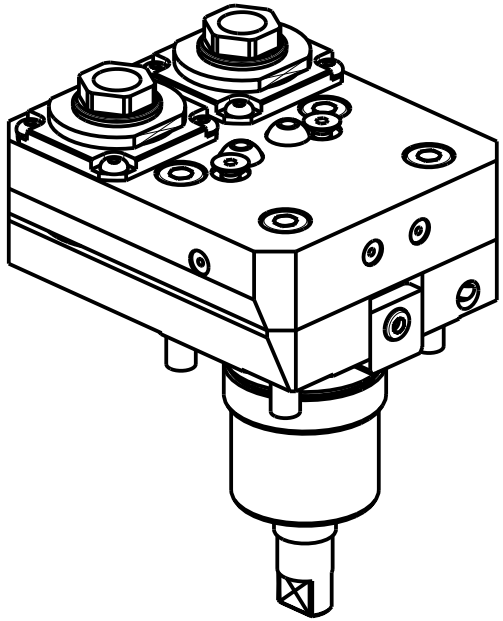

Cod. MT	Mandrino Spindle Spindel	I	RPM	Coppia Max Max Torque Max Drehmoment	Lubrificazione est. Ext. coolant Aussenkuehlung	CHIAVI NON INCLUSE Keys not included Schluessel nicht inbegriffen	
NKM0190216	ER A 16	1:1	6000	25Nm	X	CHUB32	CHUB19_SP3

CMZ

MOD: TTS 38 - TTS 46 - TTS 52 - TTS 66

MODULO MOTORIZZATO RADIALE 2 USCITE IN Y
Radial single side twin head driven tool in Y
Radial angetriebenes Werkzeug 2 Ausgaenge in Y

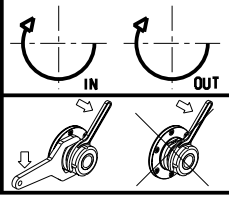

M.T. srl
Via Casino Albini 480
Tel. 0541/956034-957884
Fax 0541/956341
47842 S. GIOVANNI IN M. (RN)
e-mail: mtma@mtmarchetti.com
http://www.mtmarchetti.com

PAGINA CMZ090-4-00

Subject to change without notice.

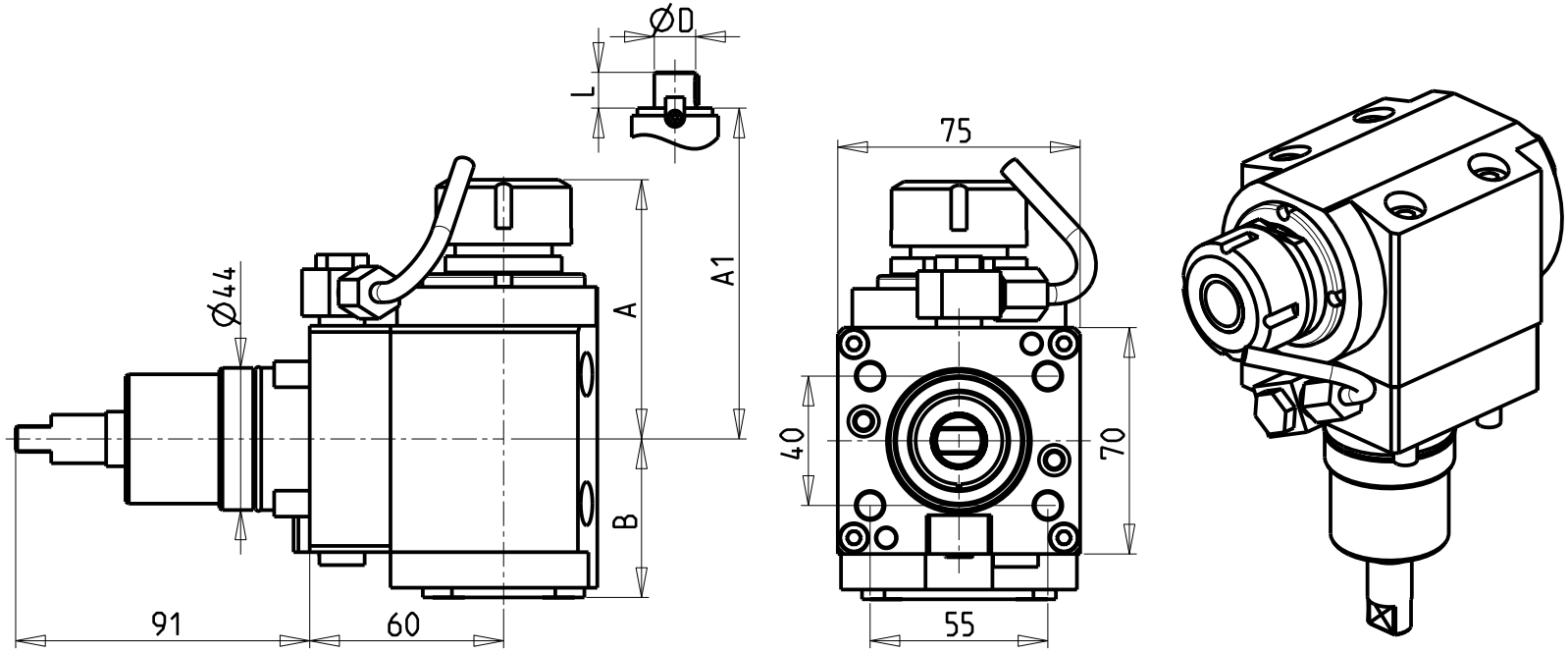

ATTENZIONE - ATTENTION - ACHTUNG

- Per lo smontaggio degli utensili utilizzare sempre la chiave di contrasto come indicato nel manuale d'uso.
- For disassembly of the tools use always the contrast key as mentioned in the user instructions.
- Fuer das Abmontieren der Werkzeuge immer den Gegenschluessel benutzen wie in der Bedienungsanleitung erwaehnt.

• Chiave inclusa
• Key included
• Schluessel inbegriffen

Cod. MT	Mandrino Spindle Spindel	I	RPM	Coppia Max Max Torque Max Drehmoment	Reversibile lato mandrino/contromandrino Reversible sub/main spindle side Umkehrbare Spindelseite/ Gegenspindelseite	Lubr. interna Coolant through Innenkuhlung	Lubr. esterna Ext. coolant Aussenkuhlung	A	A1	B	D	L	CHIAVI NON INCLUSE Keys not included Schluessel nicht einbegriffen	
NKM0240125	ER25	1:1	6000	35Nm	X	-	X	80.16	-	49	-	-	CHUB38	CHSTER25
NKM0240225	ER25	1:1	6000	35Nm	X	P=70bar	X	80.16	-	59	-	-	CHUB38	CHSTER25
NKM0240520	ERA20	1:1	6000	35Nm	X	-	X	69.23	-	49	-	-	CHUB38	CHUB22
NKM0240620	ERA20	1:1	6000	35Nm	X	P=70bar	X	69.23	-	59	-	-	CHUB38	CHUB22
NKM0241617	Ø16x17	1:1	6000	35Nm	X	-	X	-	63	49	16	17	CHUB36	CH_VTCROCE_M08 •
NKM0242219	Ø22x19	1:1	6000	35Nm	X	-	X	-	63	49	22	19	CHUB36	CH_VTCROCE_M10 •

CMZ

MOD: TTS 38 - TTS 46 - TTS 52 - TTS 66

MODULO MOTORIZZATO ASSIALE H=60mm
Axial driven tool H=60mm
Axial engetriebenes Werkzeug H=60mm

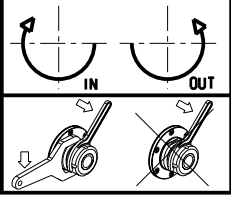

M.T. srl
Via Casino Albini 480
Tel. 0541/956034-957884
Fax 0541/956341
47842 S. GIOVANNI IN M. (RN)
e-mail: mtma@mtmarchetti.com
http://www.mtmarchetti.com

Subject to change without notice.

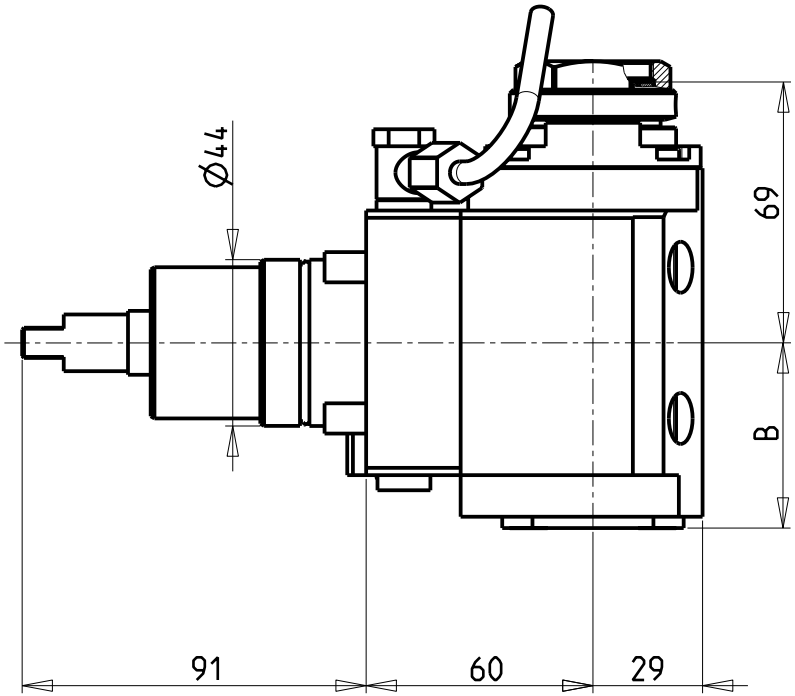

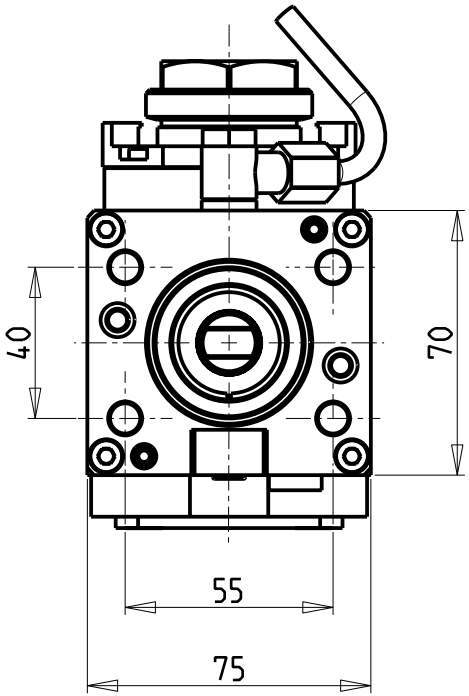

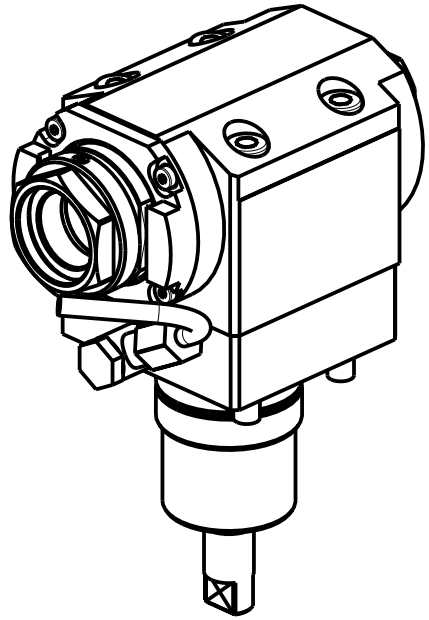

PER PORTAUTENSILI MODULARI MTSK-32 VEDI PAG. TBL300-1-32
FOR MTSK-32 QUIK CHANGE TOOLHOLDERS CLAMPINGS SEE PAGE TBL300-1-32
FUER MTSK-32 MODULARE WERKZEUGAUFNAHMEN SIEHE SEITE TBL300-1-32

Cod. MT	Mandrino Spindle Spindel	I	RPM	Coppia Max Max Torque Max Drehmoment	Reversibile lato mandrino/contromandrino Reversible sub/main spindle side Umkehrbare Spindelseite/ Gegenspindelseite	Lubr.interna Coolant through Innenkuehlung	Lubrificazione est. Ext. coolant Aussenkuehlung	B	CHIAVI NON INCLUSE Keys not included Schluessel nicht einbegriffen	
NKM1200132	MTSK-32	1:1	6000	35Nm	X	-	X	49	CHUB36	OKU0290009 •
NKM1200232	MTSK-32	1:1	6000	35Nm	X	P=70bar	X	59	CHUB36	OKU0290009 •

• Chiave inclusa
• Key included
• Schluessel inbegriffen

CMZ

MOD: TTS 38 - TTS 46 - TTS 52 - TTS 66

MODULO MOTORIZZATO ASSIALE MTSK H=60mm
Axial MTSK driven tool H=60mm
Axial MTSK angetriebenes Werkzeug H=60mm

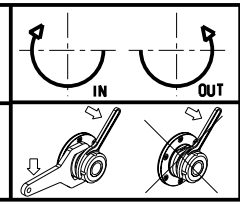

M.T. srl
Via Casino Albini 480
Tel. 0541/956034-957884
Fax 0541/956341
47842 S. GIOVANNI IN M. (RN)
e-mail: mtma@mtmarchetti.com
http://www.mtmarchetti.com

MT®

Subject to change without notice.

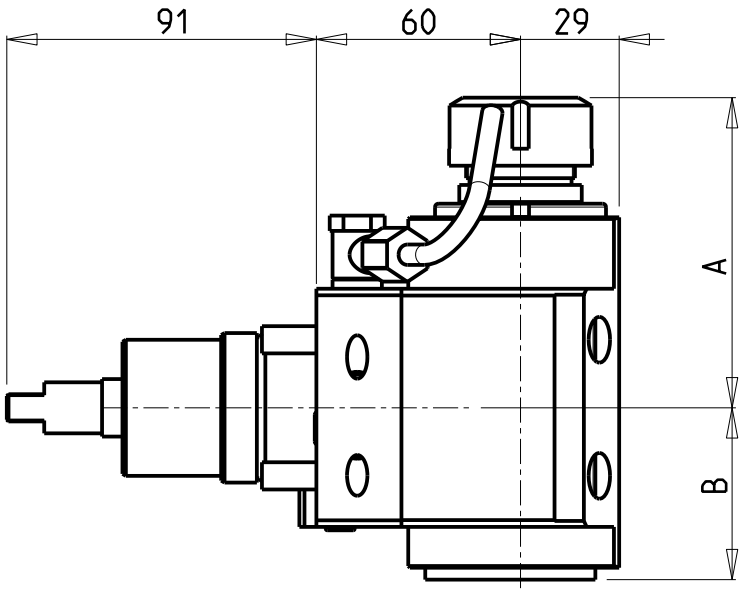

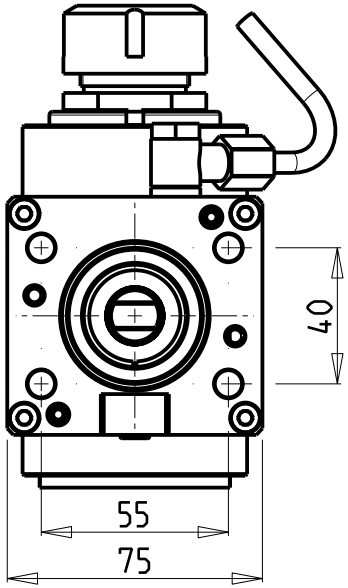

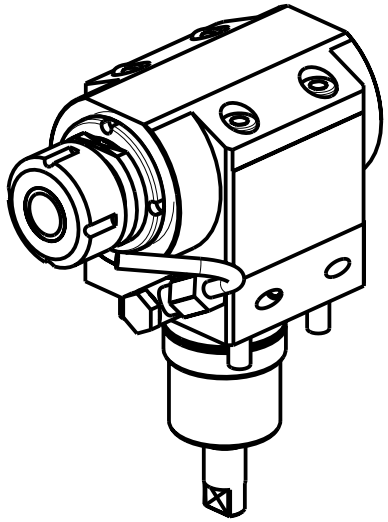

Cod. MT	Mandrino Spindle Spindel	I	RPM	Coppia Max Max Torque Max Drehmoment	Reversibile lato mandrino/contromandrino Reversible sub/main spindle side Umkehrbare Spindelseite/ Gegenspindelseite	Lubrificazione int. Coolant through Innenkuehlung	Lubrificazione est. Ext. coolant Aussenkuehlung	A	B	CHIAVI NON INCLUSE Keys not included Schluessel nicht einbegriffen	
NKM0710111	ER11	1:2	12000	20Nm	X	-	X	83.6	50.5	CHUB17	CHUB36
NKM0710211	ER11	1:2	12000	20Nm	X	P=70bar	X	83.6	60.5	CHUB17	CHUB36
NKM0710120	ER20	1:2	12000	20Nm	X	-	X	92.16	50.5	CHSTER20	CHUB36
NKM0710220	ER20	1:2	12000	20Nm	X	P=70bar	X	92.16	60.5	CHSTER20	CHUB36
NKM0710320	ERA20	1:2	12000	20Nm	X	-	X	72.5	50.5	CHUB22	CHUB36
NKM0710420	ERA20	1:2	12000	20Nm	X	P=70bar	X	72.5	60.5	CHUB22	CHUB36
NKM0710125	ER25	1:2	12000	20Nm	X	-	X	91.16	50.5	CHSTER25	CHUB38
NKM0710225	ER25	1:2	12000	20Nm	X	P=70bar	X	91.16	60.5	CHSTER25	CHUB38

CMZ

MOD: TTS 38 - TTS 46 - TTS 52 - TTS 66

MODULO MOTORIZZATO ASSIALE MOLTIPLICATO I=1:2
Axial geared-up I=1:2 driven tool
Axial angetriebenes Werkzeug uebersetzt I=1:2

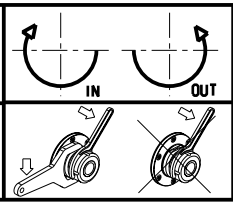

M.T. srl
Via Casino Albini 480
Tel. 0541/956034-957884
Fax 0541/956341
47842 S. GIOVANNI IN M. (RN)
e-mail: mtma@mtmarchetti.com
http://www.mtmarchetti.com

MT®

Subject to change without notice.

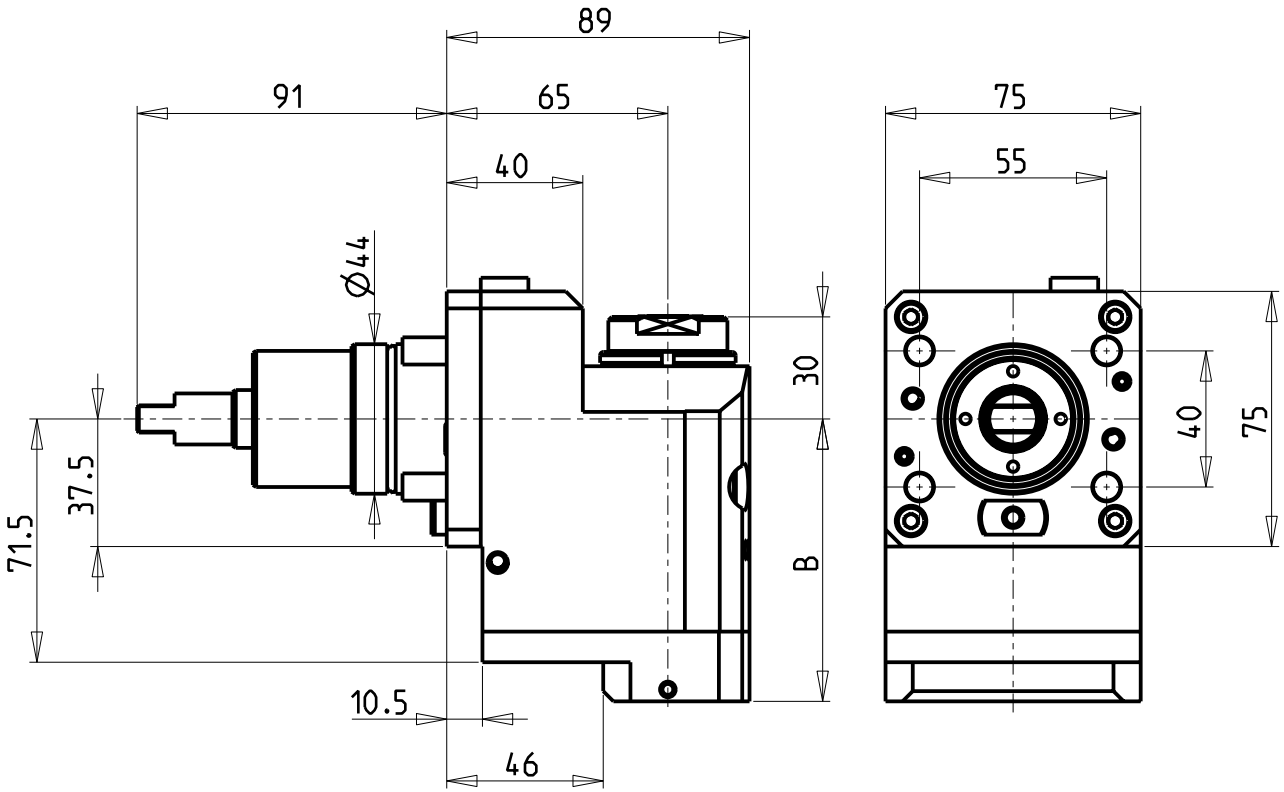

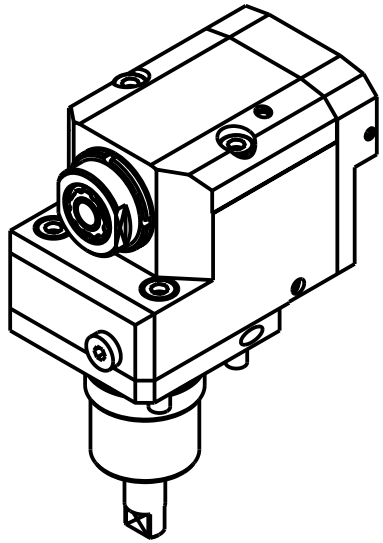

ATTENZIONE - ATTENTION - ACHTUNG

- VERIFICARE LE MISURE DI INGOMBRO PER POSSIBILE INTERFERENZA SU ALCUNI MODELLI DI MACCHINE
- Please check the overall sizes for possible interferences on some machine models
- Bitte überprüfen sie das ausmass um mögliche interferenzen auf einigen maschinen modellen zu vermeiden

- Chiave inclusa
- Key included
- Schluessel inbegriffen

Cod. MT	Mandrino Spindle Spindel	I	RPM	Coppia Max Max Torque Max Drehmoment	Reversibile lato mandrino/contromandrino Reversible sub/main spindle side Umkehrbare Spindelseite/ Gegenspindelseite	Lubrificazione int. Coolant through Innenkuehlung	Lubrificazione est. Ext. coolant Aussenkuehlung	B	CHIAVI NON INCLUSE Keys not included Schluessel nicht einbegriffen		
NKM1650316	ERA16	1:3	18000	10Nm	X	-	X	70.5	CHUB30	CHUB19_SP3	CHTAER16ZC •
NKM1650416	ERA16	1:3	18000	10Nm	X	P=30bar	X	83	CHUB30	CHUB19_SP3	CHTAER16ZC •

CMZ

MOD: TTS 38 - TTS 46 - TTS 52 - TTS 66

MODULO MOTORIZZATO ASSIALE ARRETRATO MOLTIPLICATO I=1:3 H=65mm
Axial geard-up I=1:3 rear-set driven tool H=65mm
Axial angetriebenes Werkzeug uebersetzt I=1:3 zurueckversetzt H=65mm

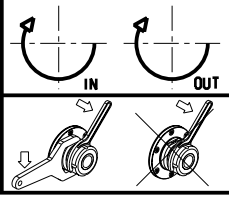

M.T. srl
Via Casino Albini 480
Tel. 0541/956034-957884
Fax 0541/956341
47842 S. GIOVANNI IN M. (RN)
e-mail: mtma@mtmarchetti.com
http://www.mtmarchetti.com

MT®

Subject to change without notice.

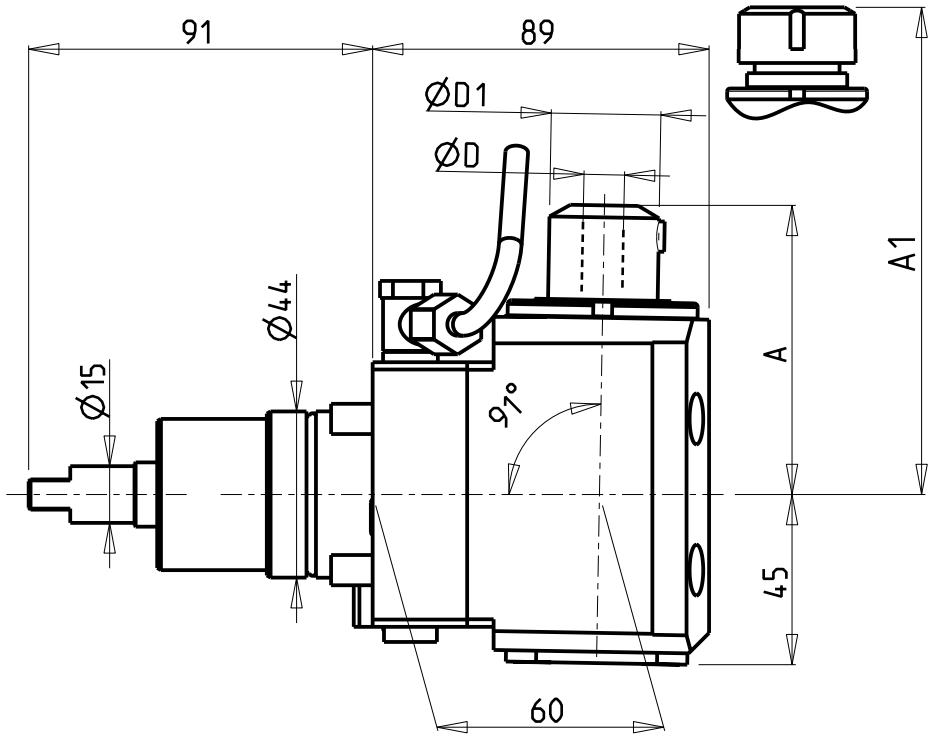

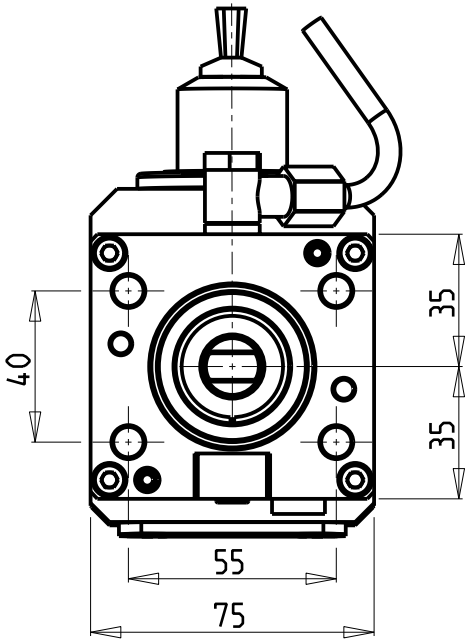

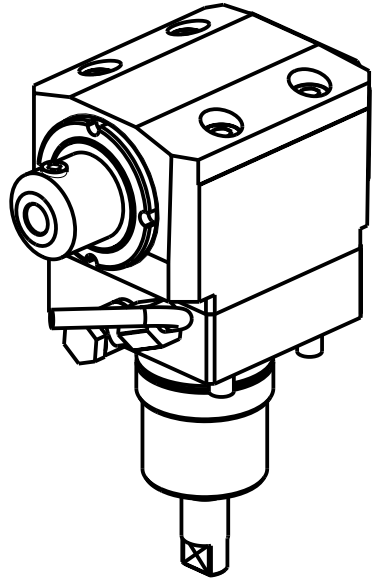

Cod. MT	Mandrino Spindle Spindel	I	RPM	Coppia Max Max Torque Max Drehmoment	Reversibile lato mandrino/contromandrino Reversible sub/main spindle side Umkehrbare Spindelseite/ Gegenspindelseite	Lubrificazione est. Ext. coolant Aussenkuehlung	A	A1	D	D1	CHIAVI NON INCLUSE Keys not included Schluessel nicht einbegriffen	
NKM1469125	ER25	1:1	6000	35Nm	X	X	-	82.4	-	-	CHUB36	CHSTER25
NKM1469108	WELDON 8	1:1	6000	35Nm	X	X	76.5	-	8	29	-	-
NKM1469110	WELDON 10	1:1	6000	35Nm	X	X	76.5	-	10	29	-	-
NKM1469112	WELDON 12	1:1	6000	35Nm	X	X	76.5	-	12	29	-	-
NKM1469116	WELDON 16	1:1	6000	35Nm	X	X	73.5	-	16	32	-	-

CMZ

MOD: TTS 38 - TTS 46 - TTS 52 - TTS 66

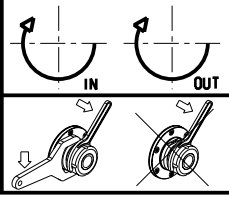

MODULO MOTORIZZATO ASSIALE PER POLIGONATURA INTERNA H=60mm
Axial driven tool for internal polygon-making H=60mm
Axial angetriebenes Werkzeug fuer interne Facettierung H=60mm

M.T. srl
Via Casino Albini 480
Tel. 0541/956034-957884
Fax 0541/956341
47842 S. GIOVANNI IN M. (RN)
e-mail: mtma@mtmarchetti.com
http://www.mtmarchetti.com

Subject to change without notice.

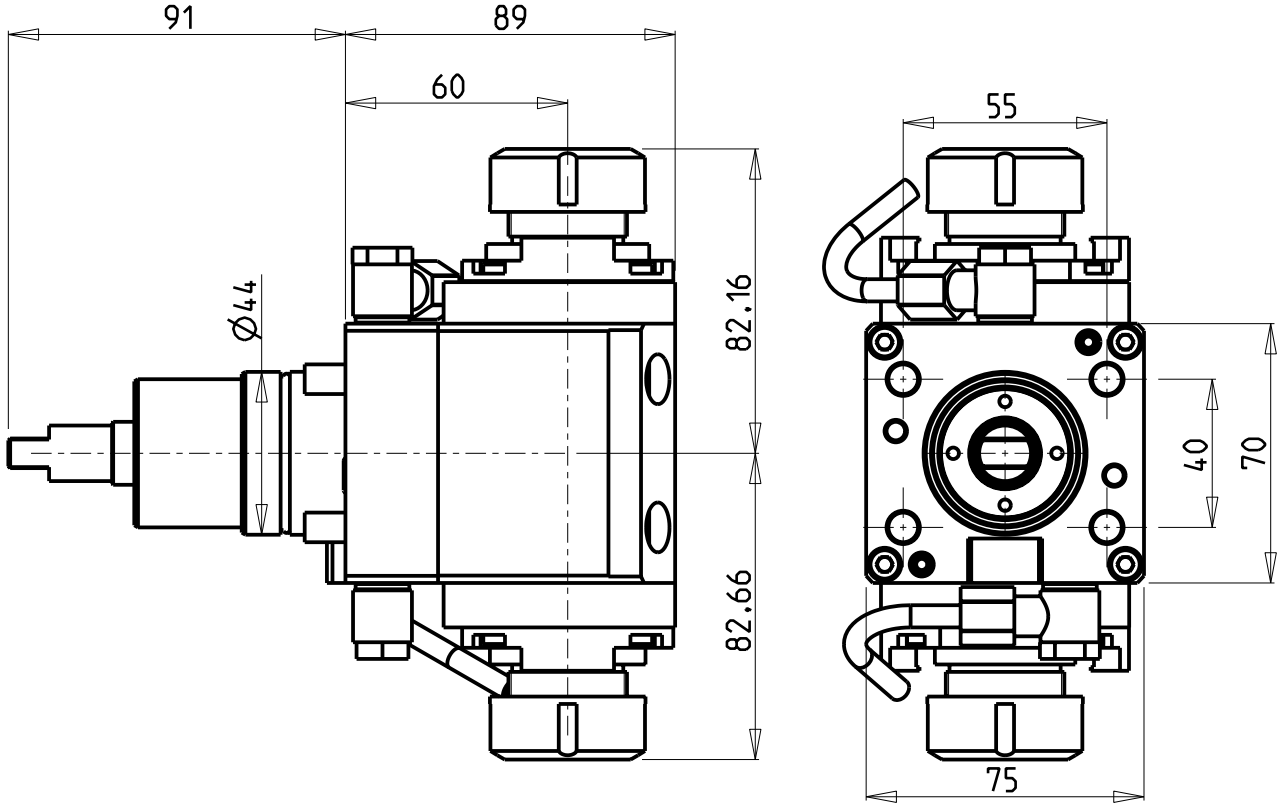

ATTENZIONE - ATTENTION - ACHTUNG

- Per lo smontaggio degli utensili utilizzare sempre la chiave di contrasto come indicato nel manuale d'uso.
- For disassembly of the tools use always the contrast key as mentioned in the user instructions.
- Fuer das Abmontieren der Werkzeuge immer den Gegenschluessel benutzen wie in der Bedienungsanleitung erwaehnt.

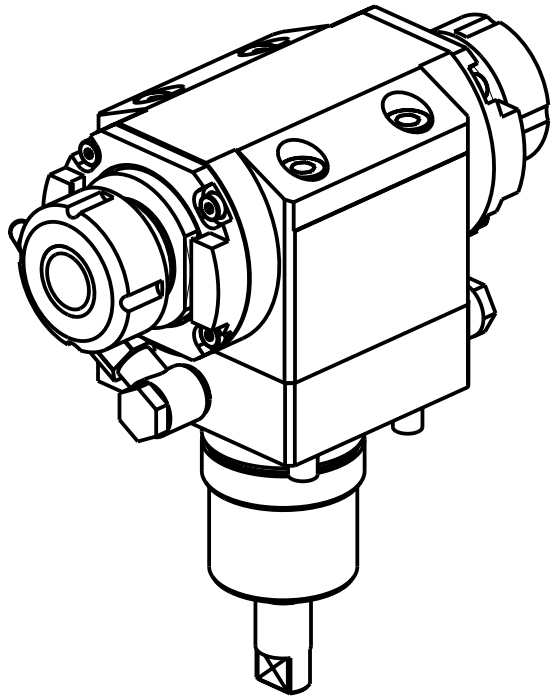

Cod. MT	Mandrino Spindle Spindel	I	RPM	Coppia Max Max Torque Max Drehmoment	Reversibile lato mandrino/contromandrino Reversible sub/main spindle side Umkehrbare Spindelseite/ Gegenspindelseite	Lubrificazione est. Ext. coolant Aussenkuehlung	CHIAVI NON INCLUSE Keys not included Schluessel nicht einbegriffen	
NKM1820225	ER25+ER25	1:1	6000	35Nm	X	X	CHSTER25	OKU0290009*

CMZ

MOD: TTS 38 - TTS 46 - TTS 52 - TTS 66

MODULO MOTORIZZATO ASSIALE BISPORGENTE H=60mm
Axial opposite face twin driven tool H=60mm
Axial angetriebenes Werkzeug halb vorspringend H=60mm

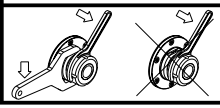

M.T. srl
Via Casino Albini 480
Tel. 0541/956034-957884
Fax 0541/956341
47842 S. GIOVANNI IN M. (RN)
e-mail: mtma@mtmarchetti.com
http://www.mtmarchetti.com

Subject to change without notice.

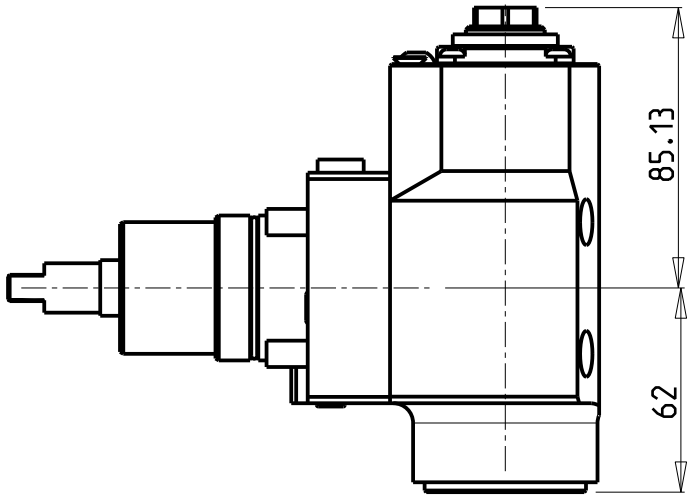

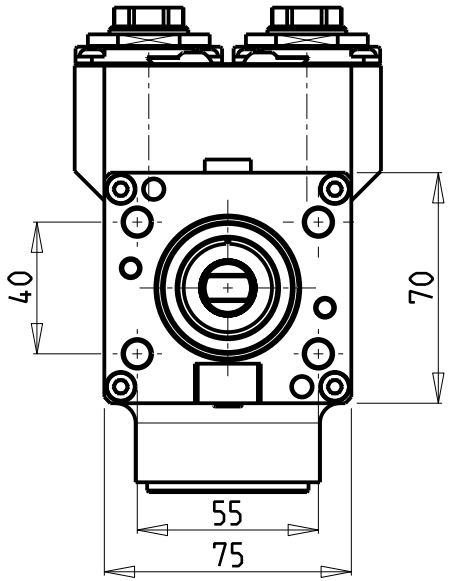

ATTENZIONE - ATTENTION - ACHTUNG

- Per lo smontaggio degli utensili utilizzare sempre la chiave di contrasto come indicato nel manuale d'uso.
- For disassembly of the tools use always the contrast key as mentioned in the user instructions.
- Fuer das Abmontieren der Werkzeuge immer den Gegenschluessel benutzen wie in der Bedienungsanleitung erwaehnt.

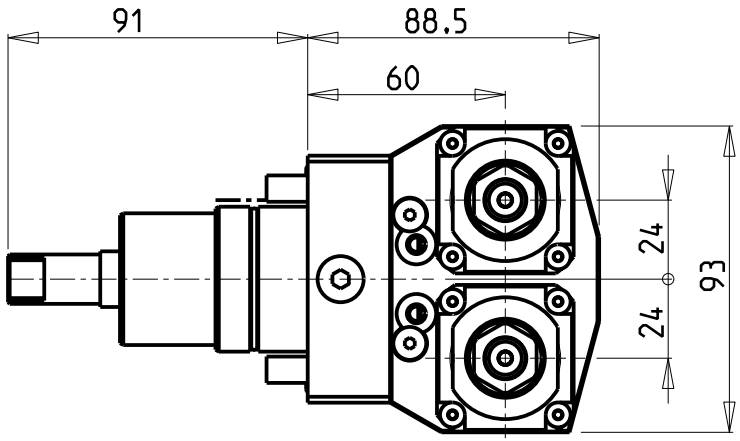

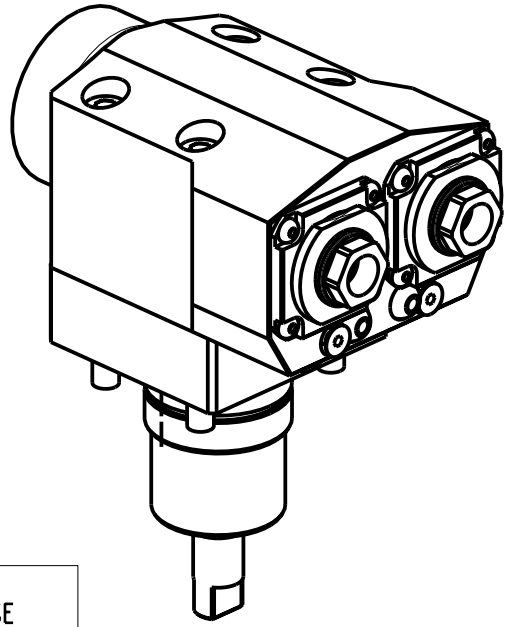

Cod. MT	Mandrino Spindle Spindel	I	RPM	Coppia Max Max Torque Max Drehmoment	Reversibile lato mandrino/contromandrino Reversible sub/main spindle side Umkehrbare Spindelseite/ Gegenspindelseite	Lubrificazione est. Ext. coolant Aussenkuehlung	CHIAVI NON INCLUSE Keys not included Schluessel nicht inbegriffen	
NKM0200216	ER A 16	1:1	6000	25Nm	X	X	CHUB32	CHUB19_SP3

CMZ

MOD: TTS 38 - TTS 46 - TTS 52 - TTS 66

MODULO MOTORIZZATO ASSIALE 2 USCITE IN Y H=60mm
Axial single side twin head driven tool in Y H=60mm
Axial angetriebenes Werkzeug 2 Ausgaenge in Y H=60mm

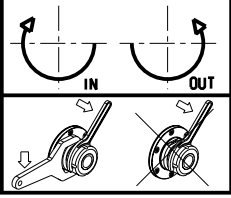

M.T. srl
Via Casino Albini 480
Tel. 0541/956034-957884
Fax 0541/956341
47842 S. GIOVANNI IN M. (RN)
e-mail: mtma@mtmarchetti.com
http://www.mtmarchetti.com

MT®

PAGINA CMZ260-4-20

Subject to change without notice.

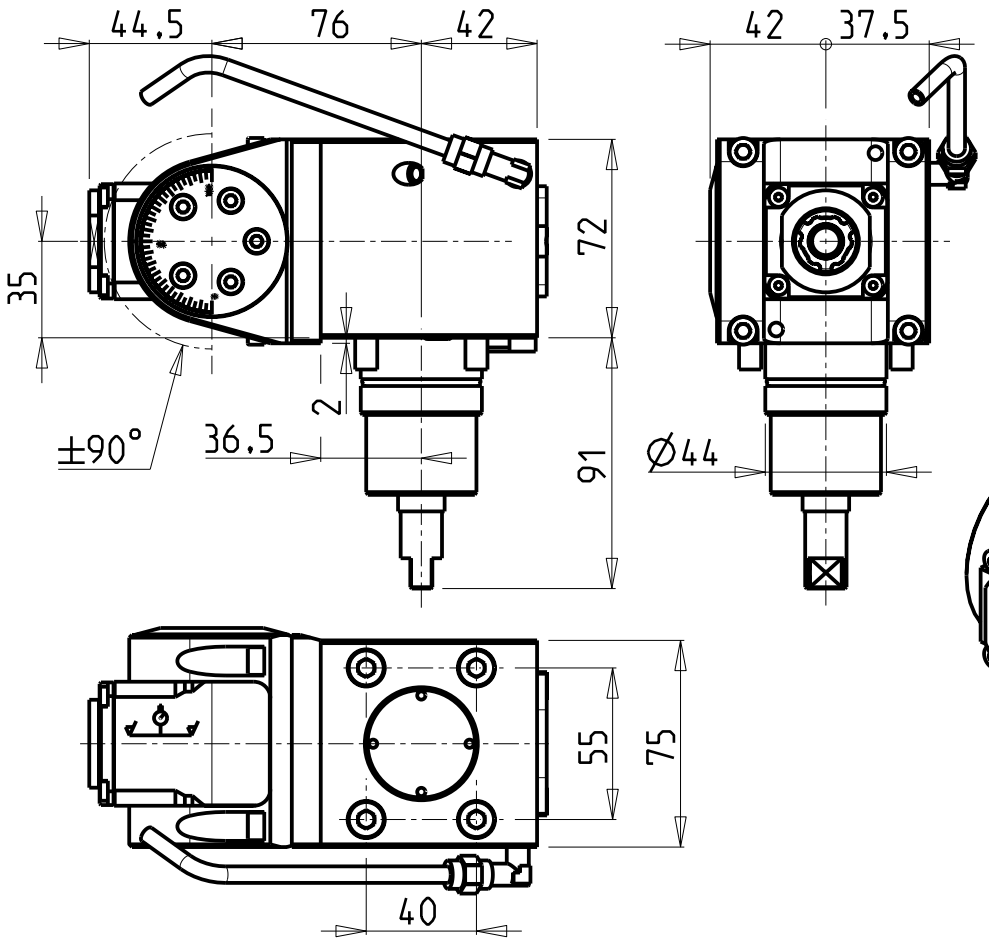

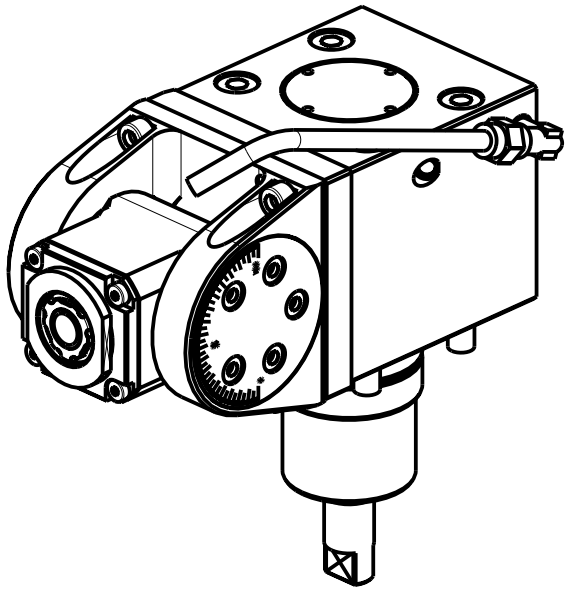

ATTENZIONE - ATTENTION - ACHTUNG

- Con l'utensile orientato a 90°, non è possibile eseguire lavorazioni a centro-pezzo!
- It is not possible to make machining operations at the center of the part with tool oriented at 90°
- Mit einem Werkzeug um 90° orientiert, ist es nich möglich, Verarbeitung von der Werkzeug-Mitte auszuführen.

ATTENZIONE - ATTENTION - ACHTUNG

- Per lo smontaggio degli utensili utilizzare sempre la chiave di contrasto come indicato nel manuale d'uso.
- For disassembly of the tools use always the contrast key as mentioned in the user instructions.
- Fuer das Abmontieren der Werkzeuge immer den Gegenschluessel benutzen wie in der Bedienungsanleitung erwaehnt.

Cod. MT	Mandrino Spindle Spindel	I	RPM	Coppia Max Max Torque Max Drehmoment	Reversibile lato mandrino/contromandrino Reversible sub/main spindle side Umkehrbare Spindelseite/ Gegenspindelseite	Lubrificazione int. Coolant through Innenkuehlung	Lubrificazione est. Ext. coolant Aussenkuhlung	CHIAVI INCLUSE Keys included Schluessel inbegriffen		
NKM0670316	ERA16	1:1	6000	20Nm	X	-	X	CHUB19_SP3	CHUB32	CHTAER16ZC
NKM0670416	ERA16	1:1	6000	20Nm	X	P=70bar	X	CHUB19_SP3	CHUB32	CHTAER16ZC

CMZ

MOD: TTS 38 - TTS 46 - TTS 52 - TTS 66

MODULO MOTORIZZATO ORIENTABILE ±90° H=35mm
±90° adjustable angle driven tool H=35mm
Angetriebenes Werkzeug schwenkbar ±90° H=35mm

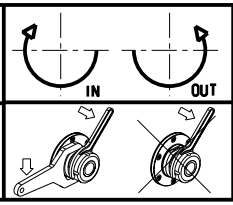

M.T. srl
Via Casino Albini 480
Tel. 0541/956034-957884
Fax 0541/956341
47842 S. GIOVANNI IN M. (RN)
e-mail: mtma@mtmarchetti.com
http://www.mtmarchetti.com

MT®

Subject to change without notice.

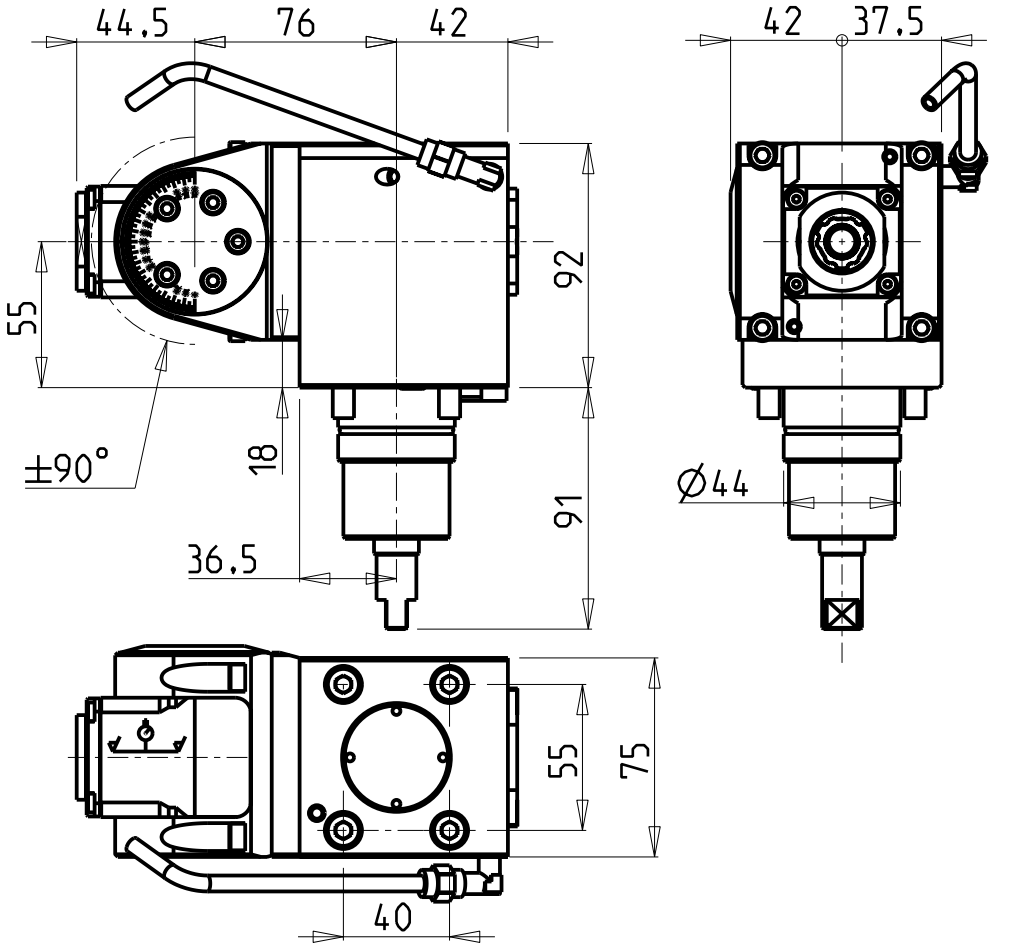

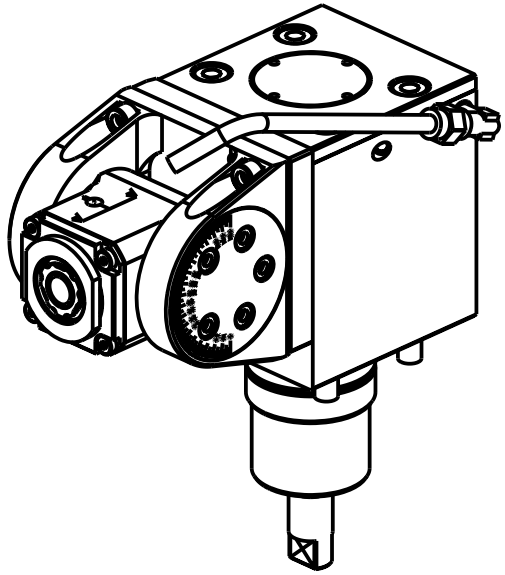

ATTENZIONE - ATTENTION - ACHTUNG

- Per lo smontaggio degli utensili utilizzare sempre la chiave di contrasto come indicato nel manuale d'uso.
- For disassembly of the tools use always the contrast key as mentioned in the user instructions.
- Fuer das Abmontieren der Werkzeuge immer den Gegenschluessel benutzen wie in der Bedienungsanleitung erwaehnt.

Cod. MT	Mandrino Spindle Spindel	I	RPM	Coppia Max Max Torque Max Drehmoment	Reversibile lato mandrino/contromandrino Reversible sub/main spindle side Umkehrbare Spindelseite/ Gegenspindelseite	Lubrificazione int. Coolant through Innenkuehlung	Lubrificazione est. Ext. coolant Aussenkuhlung	CHIAVI INCLUSE Keys included Schluessel inbegriffen			
NKM0671316	ERA16	1:1	6000	20Nm	X	-	X	CHUB19_SP3	CHUB32	CHTAER16ZC	NEW
NKM0671416	ERA16	1:1	6000	20Nm	X	P=70bar	X	CHUB19_SP3	CHUB32	CHTAER16ZC	NEW

CMZ

MOD: TTS 38 - TTS 46 - TTS 52 - TTS 66

MODULO MOTORIZZATO ORIENTABILE ±90° H=55mm
±90° adjustable angle driven tool H=55mm
Angetriebenes Werkzeug schwenkbar ±90° H=55mm

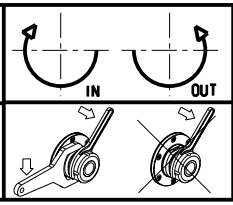

M.T. srl
Via Casino Albini 480
Tel. 0541/956034-957884
Fax 0541/956341
47842 S. GIOVANNI IN M. (RN)
e-mail: mtma@mtmarchetti.com
http://www.mtmarchetti.com

Subject to change without notice.

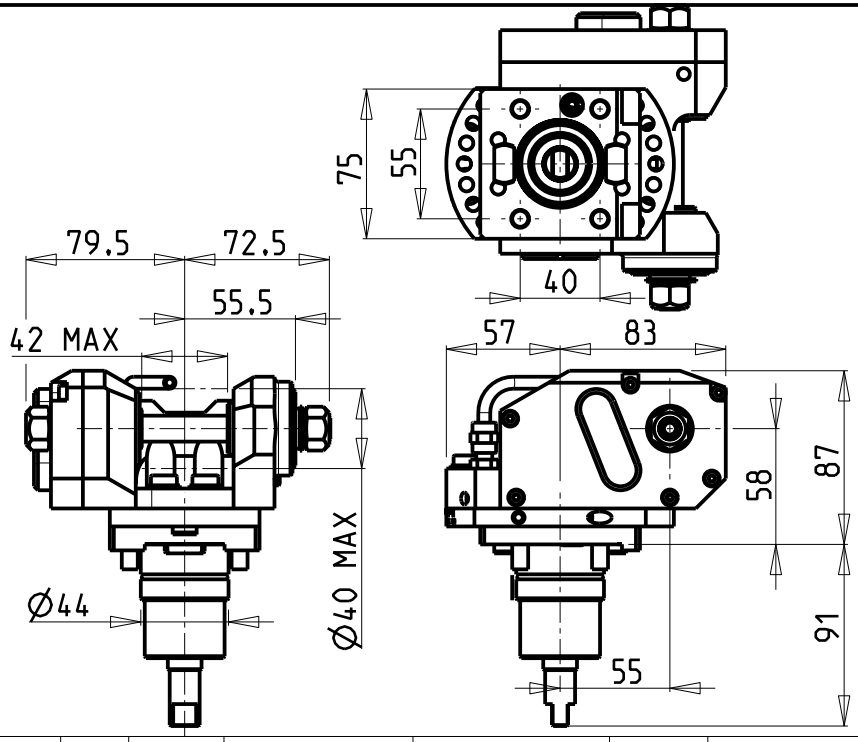

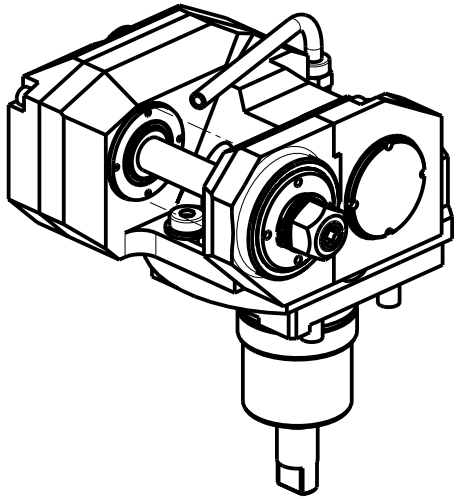

ATTENZIONE - ATTENTION - ACHTUNG

- VERIFICARE LE MISURE DI INGOMBRO PER POSSIBILE INTERFERENZA
- Please check the overall sizes for possible interferences
- Bitte überprüfen sie das Ausmass um mögliche Interferenzen zu vermeiden

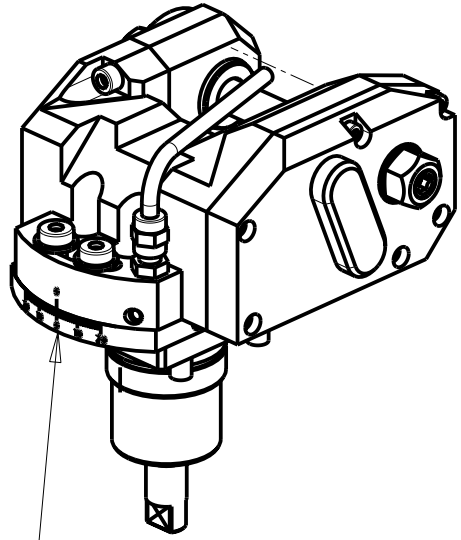

INCLINAZIONE
REGOLABILE ±20°

Cod. MT	I	RPM max	Coppia Max Max Torque Max Drehmoment	Lubrificazione est. Ext. coolant Aussenkuehlung	D (mm)	CHIAVI INCLUSE Keys included Schluessel inbegriffen				
NKM1071116	1:1	6000	30Nm	X	16	CHUB19	CHESL06	CHESL05	-	-
NKM1071113	1:1	6000	30Nm	X	13	CHUB19	CHESL06	CHESL05	-	-
NKM1071110	1:1	6000	30Nm	X	10	CHUB19	CHESL06	CHESL05	-	CHUB17
NKM1071108	1:1	6000	30Nm	X	8	CHUB19	CHESL06	CHESL05	CHESL04	CHUB13
NKM1071155	1:1	6000	30Nm	X	1/2"	CHUB19	CHESL06	CHESL05	-	-
NKM1072116	2:1	3000	50Nm	X	16	CHUB19	CHESL06	CHESL05	-	-
NKM1072113	2:1	3000	50Nm	X	13	CHUB19	CHESL06	CHESL05	-	-
NKM1072110	2:1	3000	50Nm	X	10	CHUB19	CHESL06	CHESL05	-	CHUB17
NKM1072108	2:1	3000	50Nm	X	8	CHUB19	CHESL06	CHESL05	CHESL04	CHUB13
NKM1072155	2:1	3000	50Nm	X	1/2"	CHUB19	CHESL06	CHESL05	-	-

CMZ

MOD: TTS 38 - TTS 46 - TTS 52 - TTS 66

MODULO MOTORIZZATO PORTACREATORE
Driven gear hobber
Angetriebenes Zahnradwaelzfraes-Werkzeug

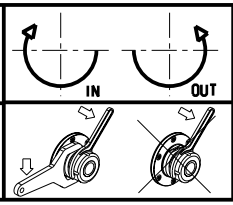

M.T. srl
Via Casino Albini 480
Tel. 0541/956034-957884
Fax 0541/956341
47842 S. GIOVANNI IN M. (RN)
e-mail: mtma@mtmarchetti.com
http://www.mtmarchetti.com

MT®

Subject to change without notice.

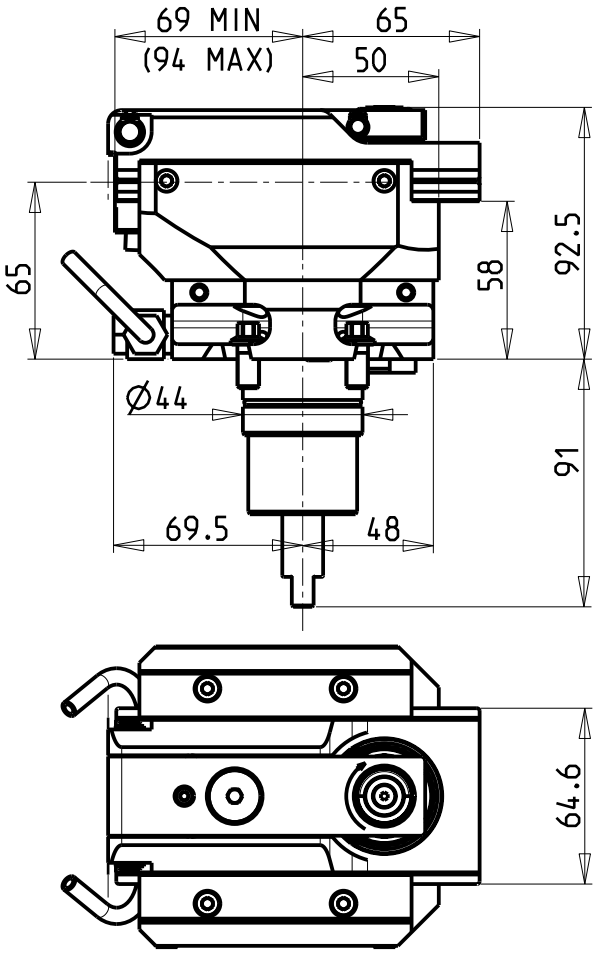

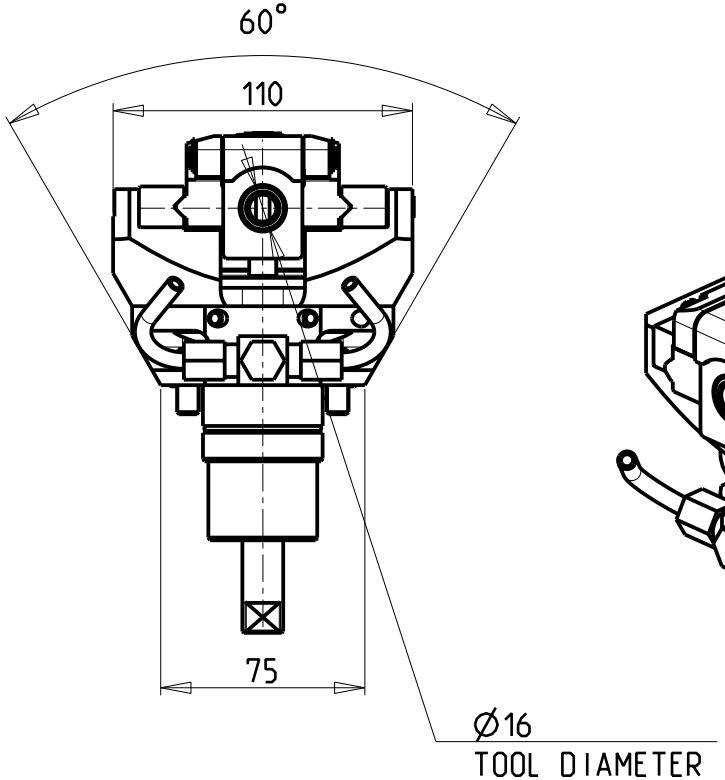

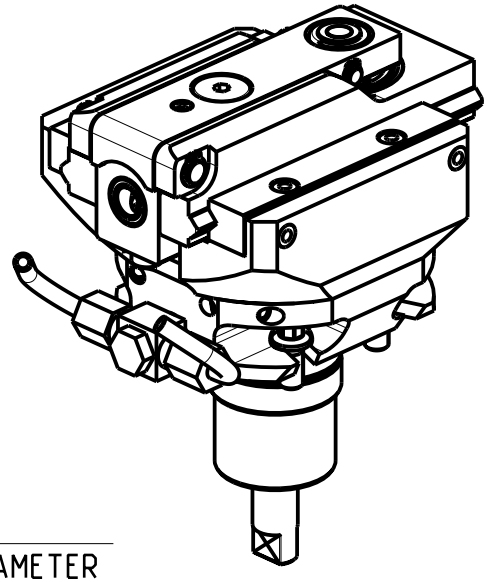

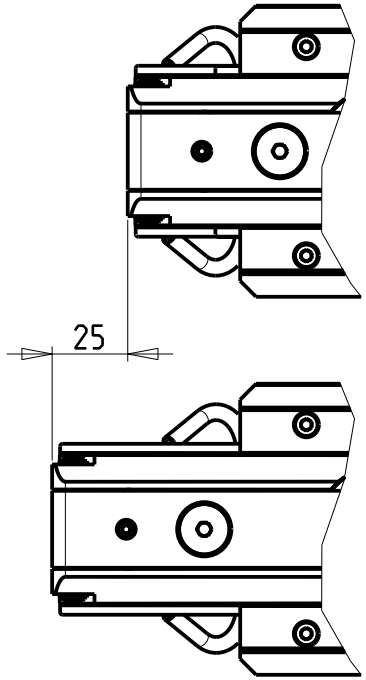

Cod. MT	I	RPM MAX	Reversibile lato mandrino/contromandrino Reversible sub/main spindle side Umkehrbare Spindelseite/ Gegenspindelseite	Lubr. esterna Ext. coolant Aussenkuehlung
NKM1210200	4:1	2400	X	X

DOTAZIONI - SUPPLIED WITH - AUSSTATTUNG

N°1 Boccola di riduz. Ø16-Ø12 e N°1 Boccola di riduz. Ø16-Ø10
N°1 Reduction bush Ø16-Ø12 and N°1 Reduction bush Ø16-Ø10
N°1 Reduzierbuchsen Ø16-Ø12 und N°1 Reduzierbuchsen Ø16-Ø10

PER UTENSILI STOZZATORI VEDI PAG. TBL400-1-00
FOR DRIVEN SLOTTING TOOL CUTTING-TOOLS SEE PAGE TBL400-1-00
FÜR NUTENSTOSS-WERKZEUG SCHNEIDEWERKZEUGE SIEHE SEITE TBL400-1-00

CMZ

MOD: TTS 38 - TTS 46 - TTS 52 - TTS 66

MODULO MOTORIZZATO STOZZATORE CORSA 25mm H=65mm
Slotting driven tool 25mm stroke H=65mm
Keilnutenstossmaschine 25mm Hub H=65mm

M.T. srl
Via Casino Albini 480
Tel. 0541/956034-957884
Fax 0541/956341
47842 S. GIOVANNI IN M. (RN)
e-mail: mtma@mtmarchetti.com
http://www.mtmarchetti.com

Subject to change without notice.

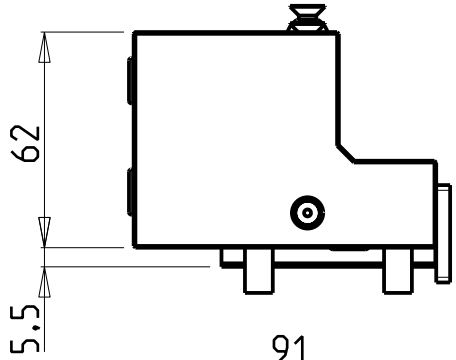

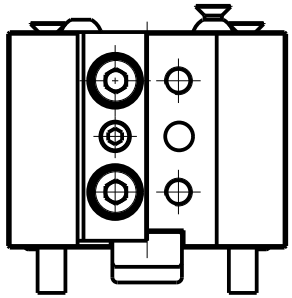

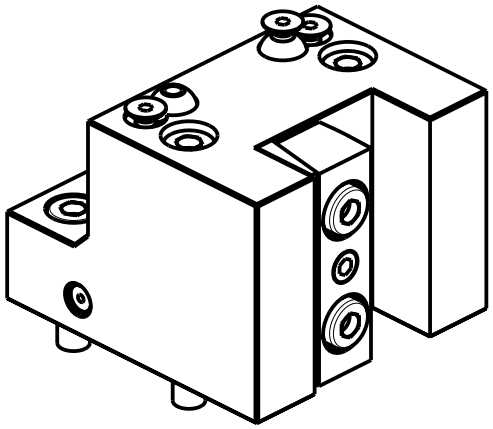

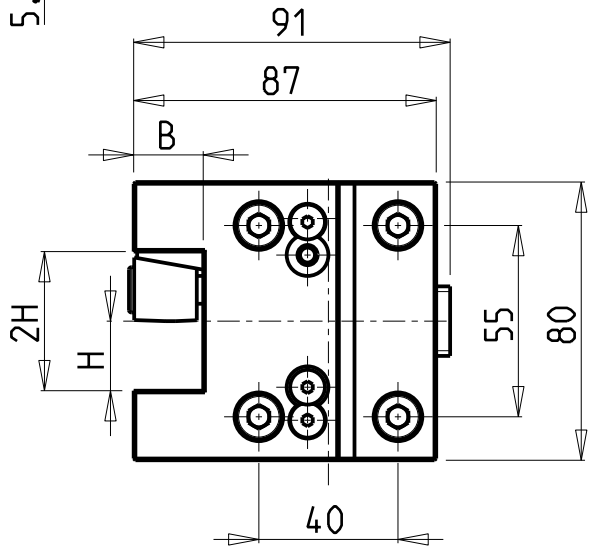

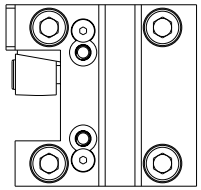

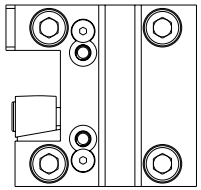

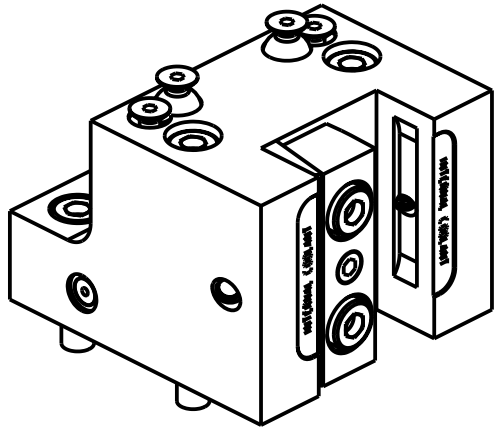

NKM0162050

Cod. MT	N°Utensili N°Tools N°Werkzeuge	Reversibile lato mandrino/contromandrino Reversible sub/main spindle side Umkehrbare Spindelseite/ Gegenspindelseite	Lubrificazione int. Coolant through Innenkuehlung	Lubrificazione est. Ext. coolant Aussenkuehlung	Misure Dimensions Masse	B	H	
NKM0162010	1	X	-	X	mm	20	20	
NKM0162050	1	X	P=70bar	X	mm	20	20	NEW

CMZ

MOD: TTS 38 - TTS 46 - TTS 52 - TTS 66

PORTAUTENSILE RADIALE SINGOLO QD=20mm
Radial single static tool QD=20mm
Radial Single-Werkzeughalter QD=20mm

M.T. srl
Via Casino Albini 480
Tel. 0541/956034-957884
Fax 0541/956341
47842 S. GIOVANNI IN M. (RN)
e-mail: mtma@mtmarchetti.com
http://www.mtmarchetti.com

Subject to change without notice.

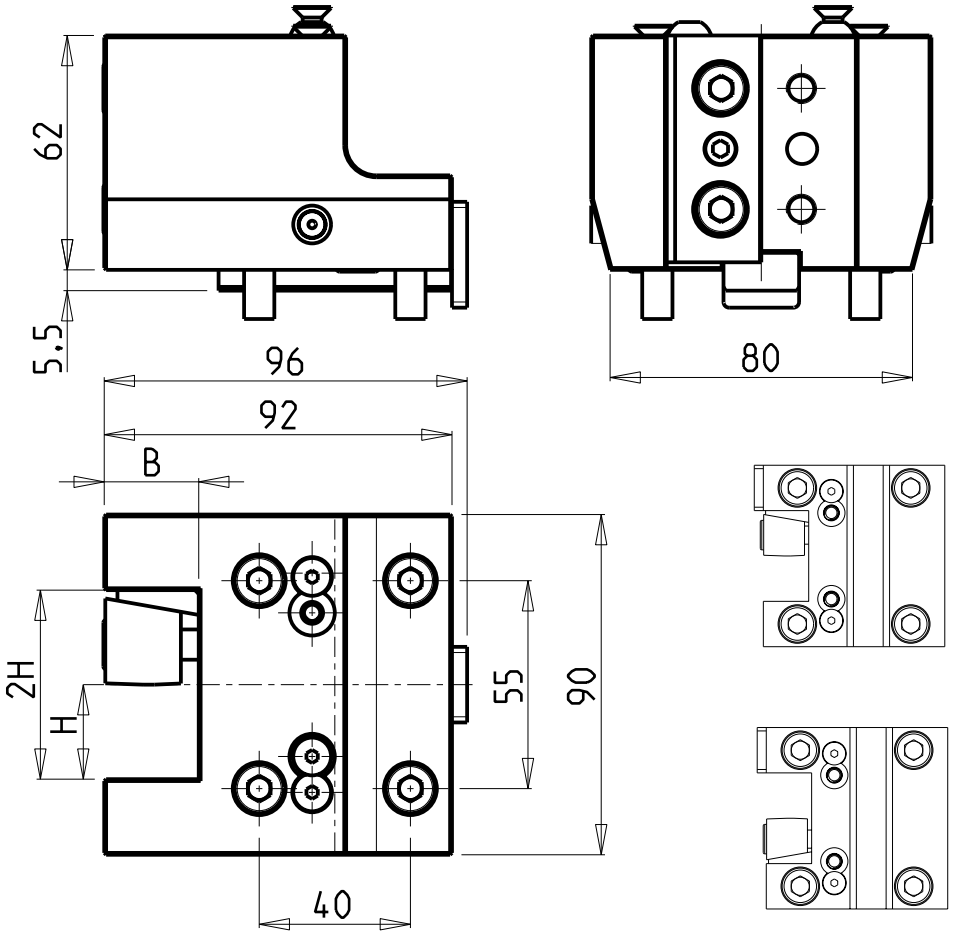

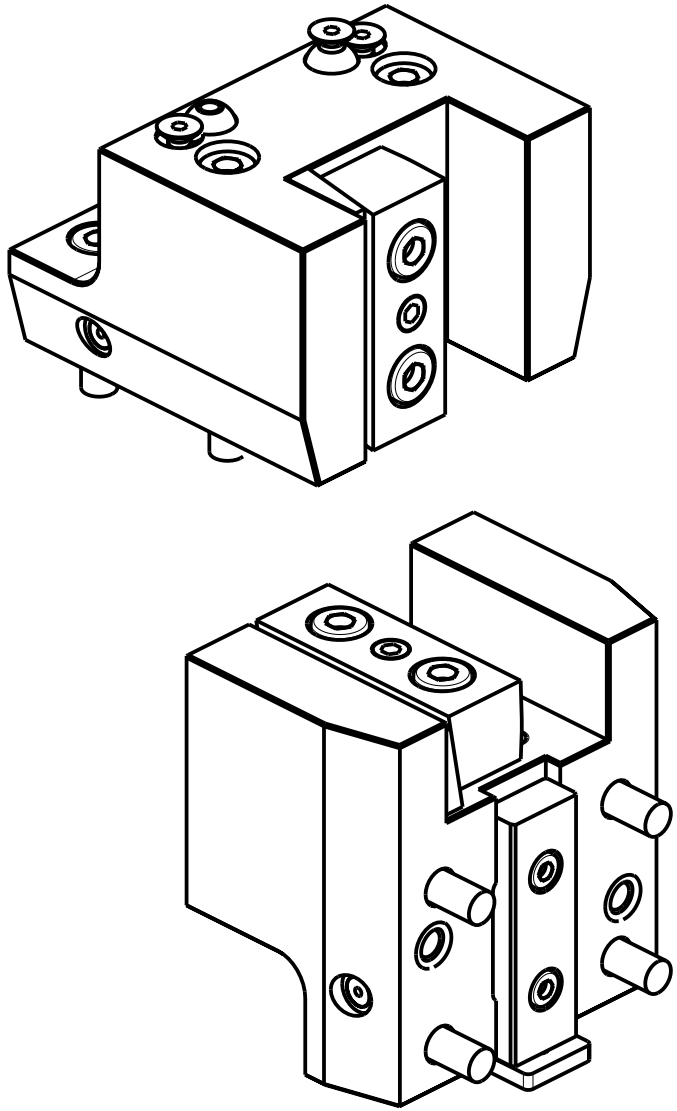

Cod. MT	N°Utensili N°Tools N°Werkzeuge	Reversibile lato mandrino/contromandrino Reversible sub/main spindle side Umkehrbare Spindelseite/ Gegenspindelseite	Misure Dimensions Masse	B	H
NKM0162510	1	X	mm	25	25

CMZ

MOD: TTS 38 - TTS 46 - TTS 52 - TTS 66

PORTAUTENSILE RADIALE SINGOLO QD=25mm
Radial single static tool QD=25mm
Radial Single-Werkzeughalter QD=25mm

M.T. srl
Via Casino Albini 480
Tel. 0541/956034-957884
Fax 0541/956341
47842 S. GIOVANNI IN M. (RN)
e-mail: mtma@mtmarchetti.com
http://www.mtmarchetti.com

Subject to change without notice.

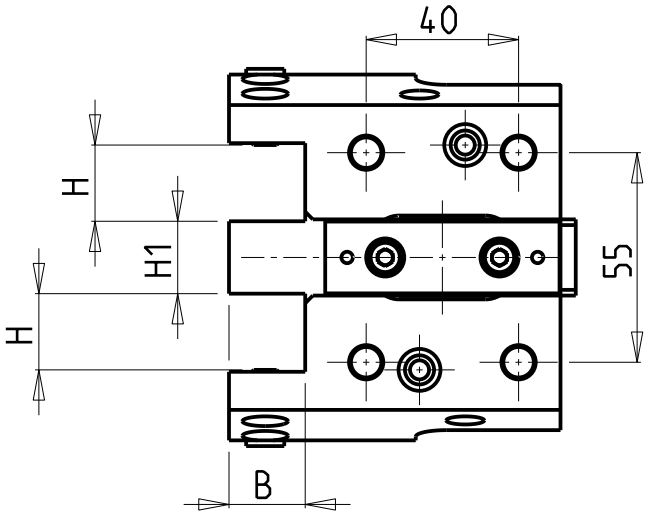

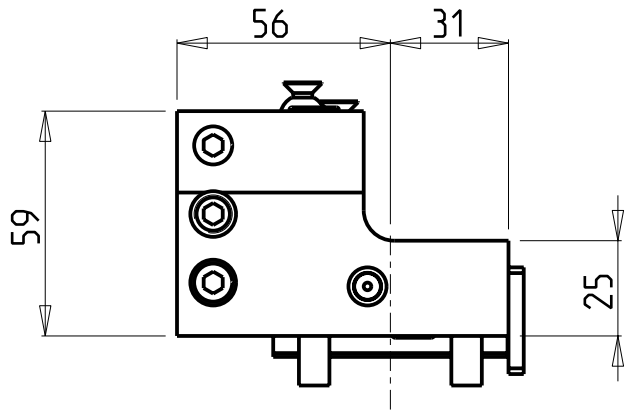

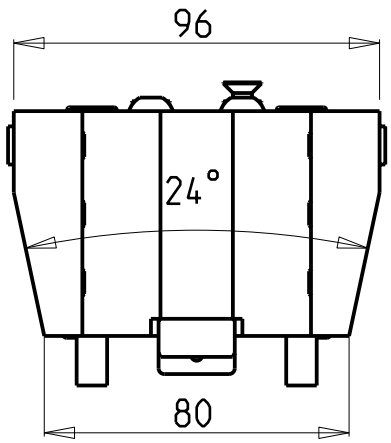

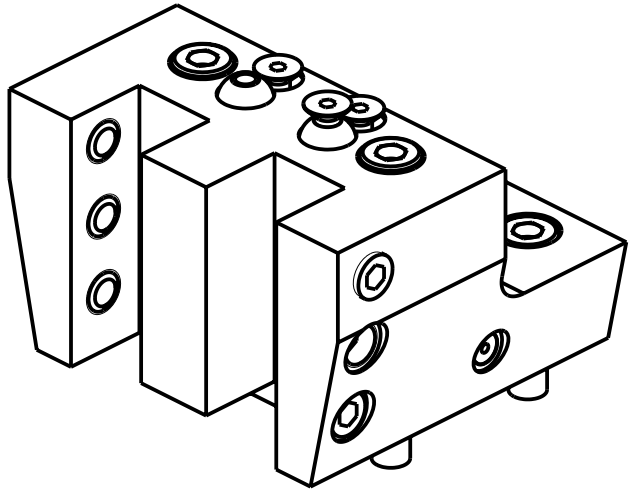

Cod. MT	Reversibile lato mandrino/contromandrino Reversible sub/main spindle side Umkehrbare Spindelseite/ Gegenspindelseite	Misure Dimensions Masse	B	H	H1
NKM1972000	X	mm	20	20	19

CMZ

MOD: TTS 38 - TTS 46 - TTS 52 - TTS 66

PORTAUTENSILE RADIALE SOVRAPPOSTO QD=20mm
Radial single side twin static tool QD=20mm
Radial Werkzeughalter ueberlagert QD=20mm

M.T. srl
Via Casino Albini 480
Tel. 0541/956034-957884
Fax 0541/956341
47842 S. GIOVANNI IN M. (RN)
e-mail: mtma@mtmarchetti.com
http://www.mtmarchetti.com

Subject to change without notice.

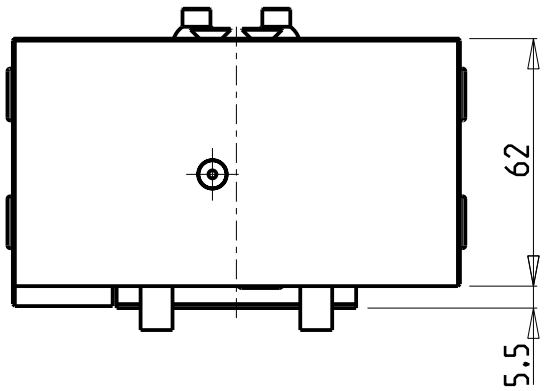

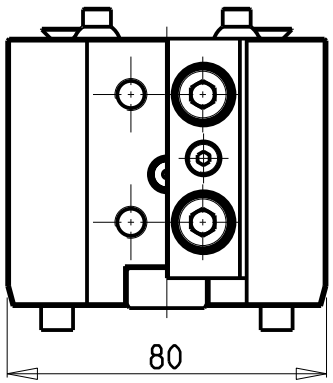

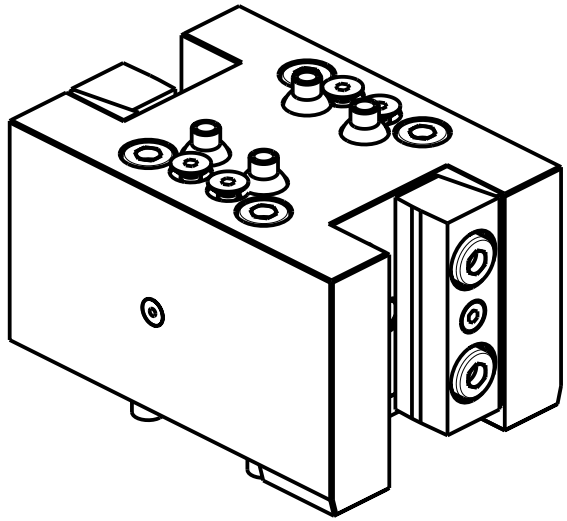

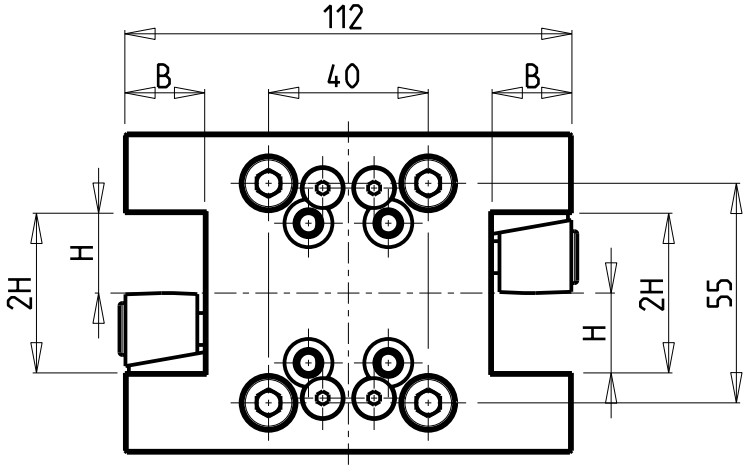

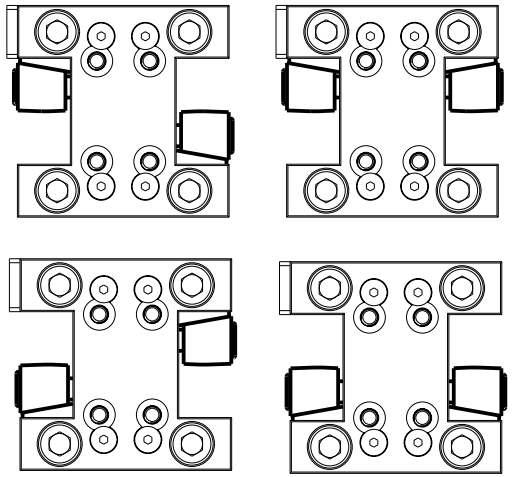

Cod. MT	N°Utensili N°Tools N°Werkzeuge	Reversibile lato mandrino/contromandrino Reversible sub/main spindle side Umkehrbare Spindelseite/ Gegenspindelseite	Misure Dimensions Masse	B	H
NKM0152010	2	x	mm	20	20

CMZ

MOD: TTS 38 - TTS 46 - TTS 52 - TTS 66

PORTAUTENSILE RADIALE DOPPIO QD=20mm
Radial double static tool QD=20mm
Radial Doppel-Werkzeughalter QD=20mm

M.T. srl
Via Casino Albini 480
Tel. 0541/956034-957884
Fax 0541/956341
47842 S. GIOVANNI IN M. (RN)
e-mail: mtma@mtmarchetti.com
http://www.mtmarchetti.com

Subject to change without notice.

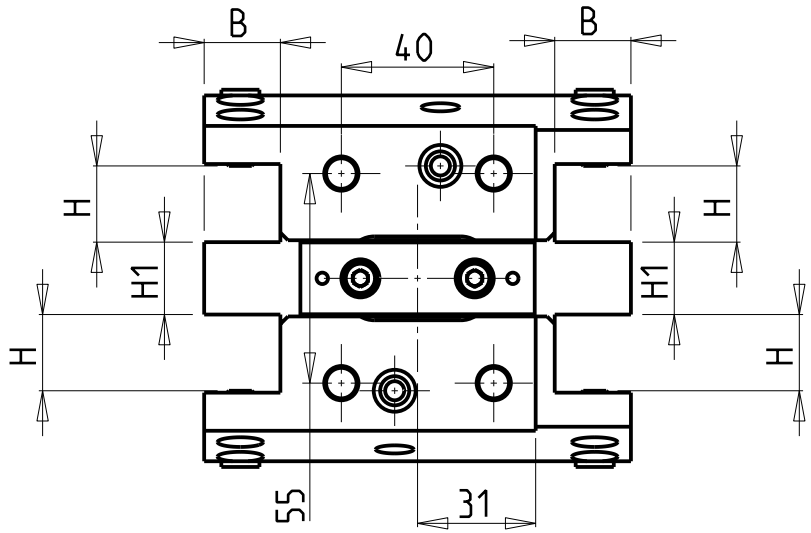

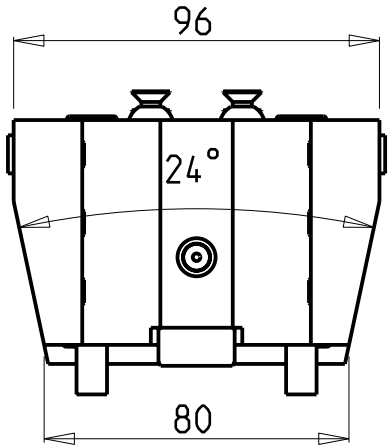

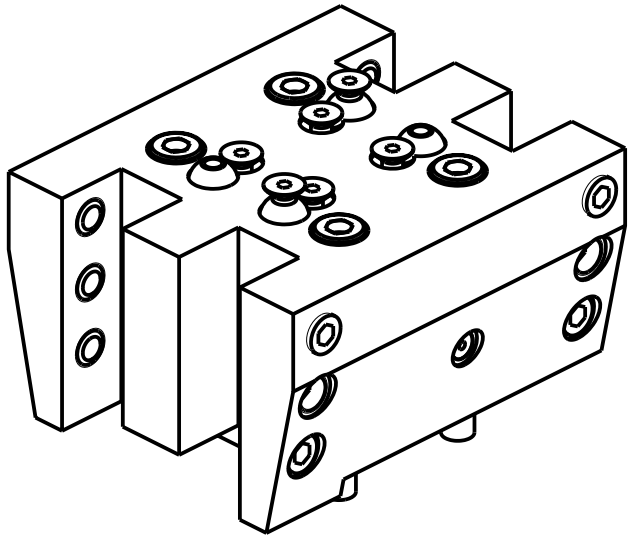

Cod. MT	Reversibile lato mandrino/contromandrino Reversible sub/main spindle side Umkehrbare Spindelseite/ Gegenspindelseite	Misure Dimensions Masse	B	H	H1
NKM1982000	X	mm	20	20	19

CMZ

MOD: TTS 38 - TTS 46 - TTS 52 - TTS 66

PORTAUTENSILE RADIALE DOPPIO SOVRAPPOSTO QD=20mm
Radial double side twin static tool QD=20mm
Radial Doppel-Werkzeughalter ueberlagert QD=20mm

M.T. srl
Via Casino Albini 480
Tel. 0541/956034-957884
Fax 0541/956341
47842 S. GIOVANNI IN M. (RN)
e-mail: mtma@mtmarchetti.com
http://www.mtmarchetti.com

Subject to change without notice.

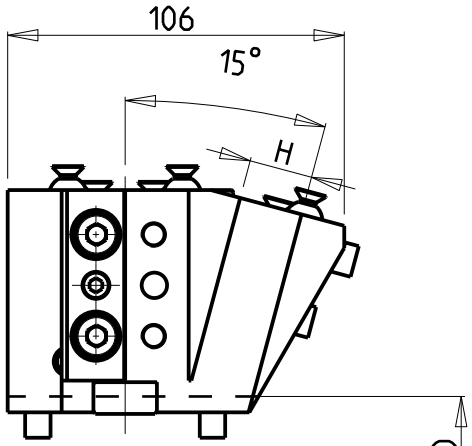

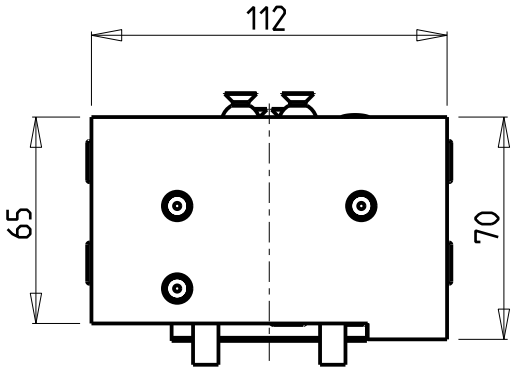

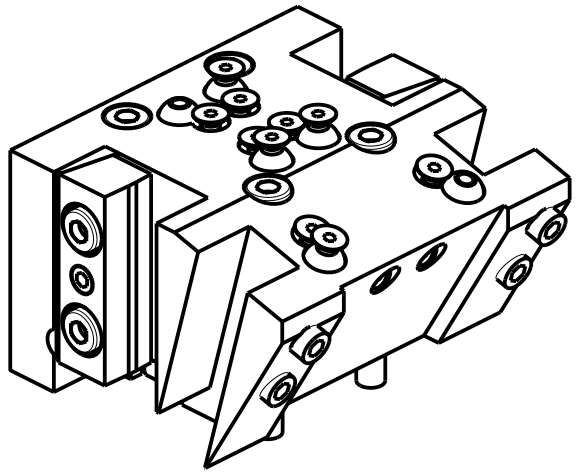

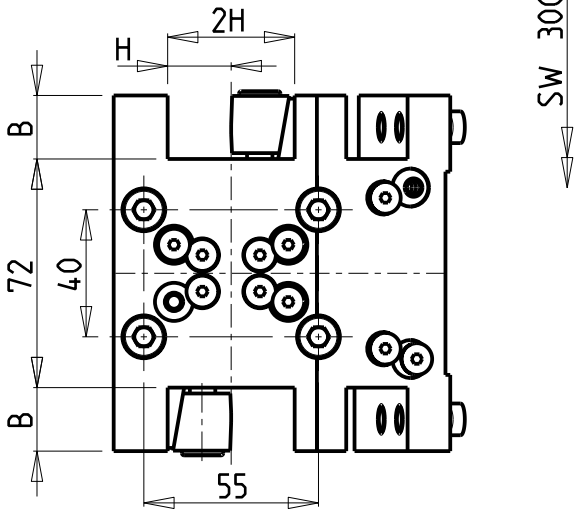

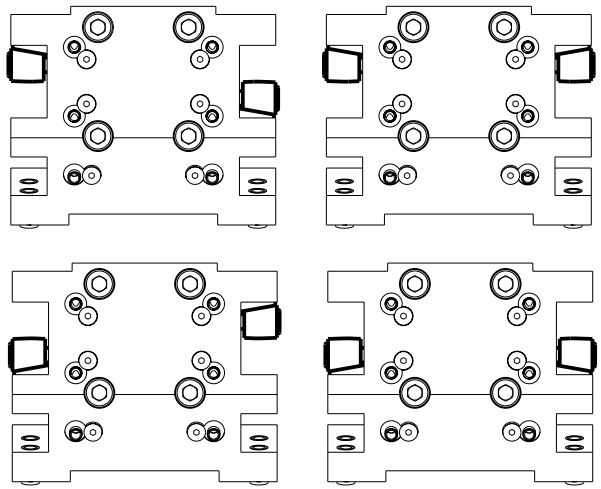

Cod. MT	N°Utensili N°Tools N°Werkzeuge	Misure Dimensions Masse	B	H
NKM0452000	4	mm	20	20

CMZ

MOD: TTS 38 - TTS 46 - TTS 52 - TTS 66

PORTAUTENSILE RADIALE MULTIPLO QD=20mm
Radial multiple static tool QD=20mm
Radial Mehrfach-Halter QD=20mm

M.T. srl
Via Casino Albini 480
Tel. 0541/956034-957884
Fax 0541/956341
47842 S. GIOVANNI IN M. (RN)
e-mail: mtma@mtmarchetti.com
http://www.mtmarchetti.com

Subject to change without notice.

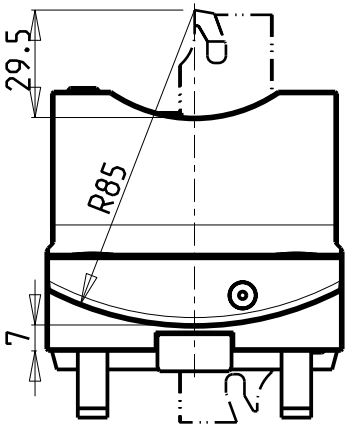

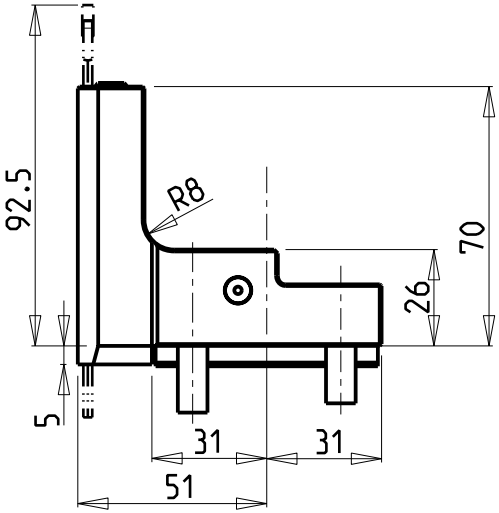

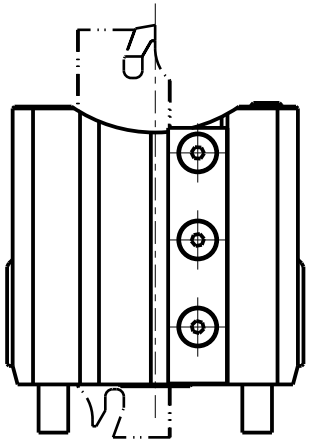

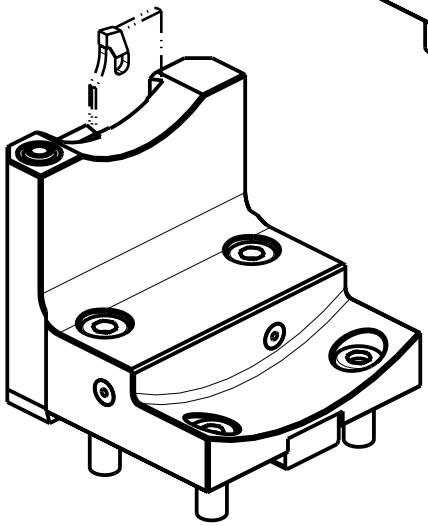

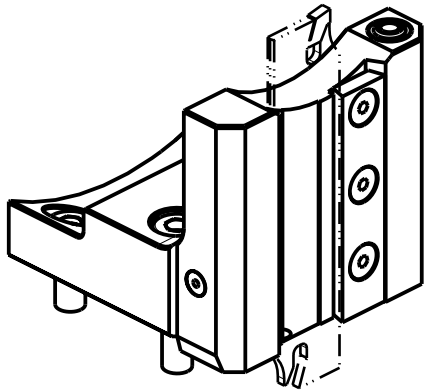

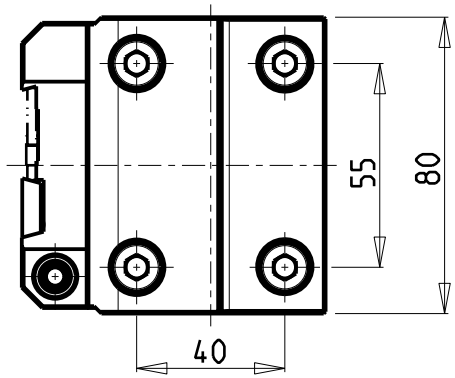

Cod. MT	N°Utensili N°Tools N°Werkzeuge
NKM0170226	1

DOTAZIONI - SUPPLIED WITH - AUSSTATTUNG

N°1 - LAMA - BLADE - KLINGE KENNAMETAL H=26 Sp. 3/4mm

N°10 - INSERTI - INSERTS - EINLAGEN

N°1 - CHIAVE A T PER MONTAGGIO INSERTI
- T-WRENCH FOR INSERT SET UP
- T-SCHLUESSEL FUER EINSATZSTUECK-MONTAGE

CMZ

MOD: TTS 38 - TTS 46 - TTS 52 - TTS 66

PORTAUTENSILE RADIALE PER LAMA
Radial blade holder
Radial Abstechhalter

M.T. srl
Via Casino Albini 480
Tel. 0541/956034-957884
Fax 0541/956341
47842 S. GIOVANNI IN M. (RN)
e-mail: mtma@mtmarchetti.com
http://www.mtmarchetti.com

Subject to change without notice.

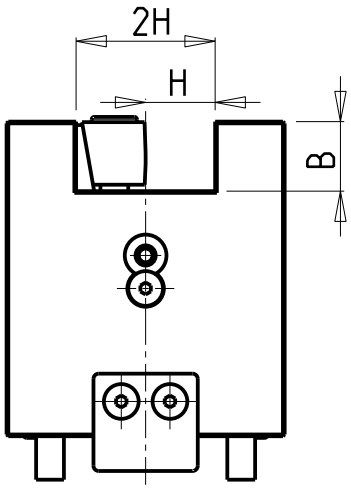

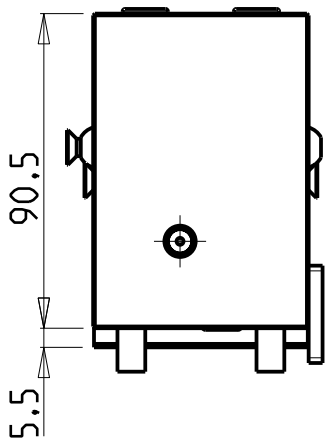

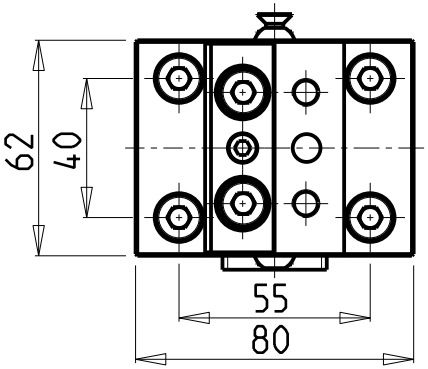

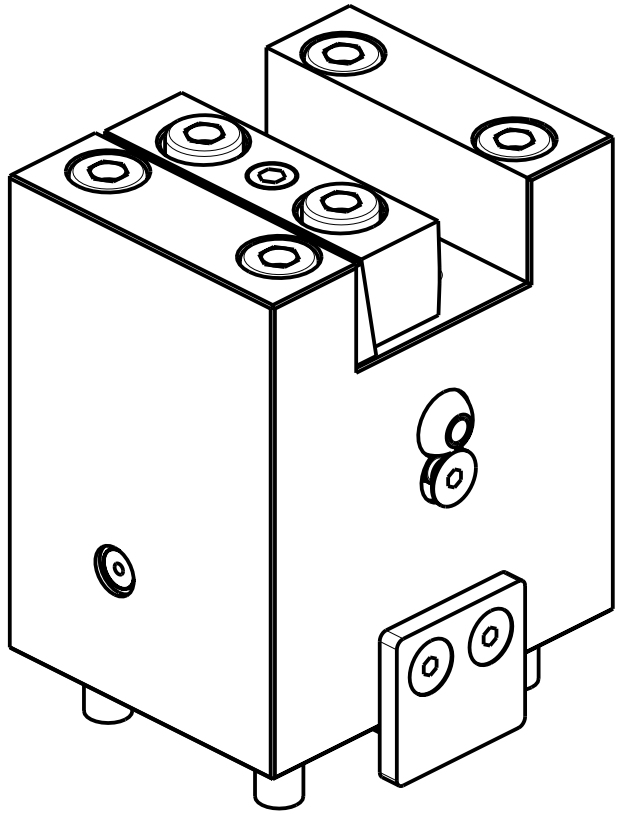

Cod. MT	N°Utensili N°Tools N°Werkzeuge	Reversibile lato mandrino/contromandrino Reversible sub/main spindle side Umkehrbare Spindelseite/ Gegenspindelseite	Misure Dimensions Masse	B	H
NKM0182010	1	X	mm	20	20

CMZ

MOD: TTS 38 - TTS 46 - TTS 52 - TTS 66

PORTAUTENSILE ASSIALE SINGOLO QD=20mm
Axial single static tool QD=20mm
Axial Single-Werkzeughalter QD=20mm

M.T. srl
Via Casino Albini 480
Tel. 0541/956034-957884
Fax 0541/956341
47842 S. GIOVANNI IN M. (RN)
e-mail: mtma@mtmarchetti.com
http://www.mtmarchetti.com

Subject to change without notice.

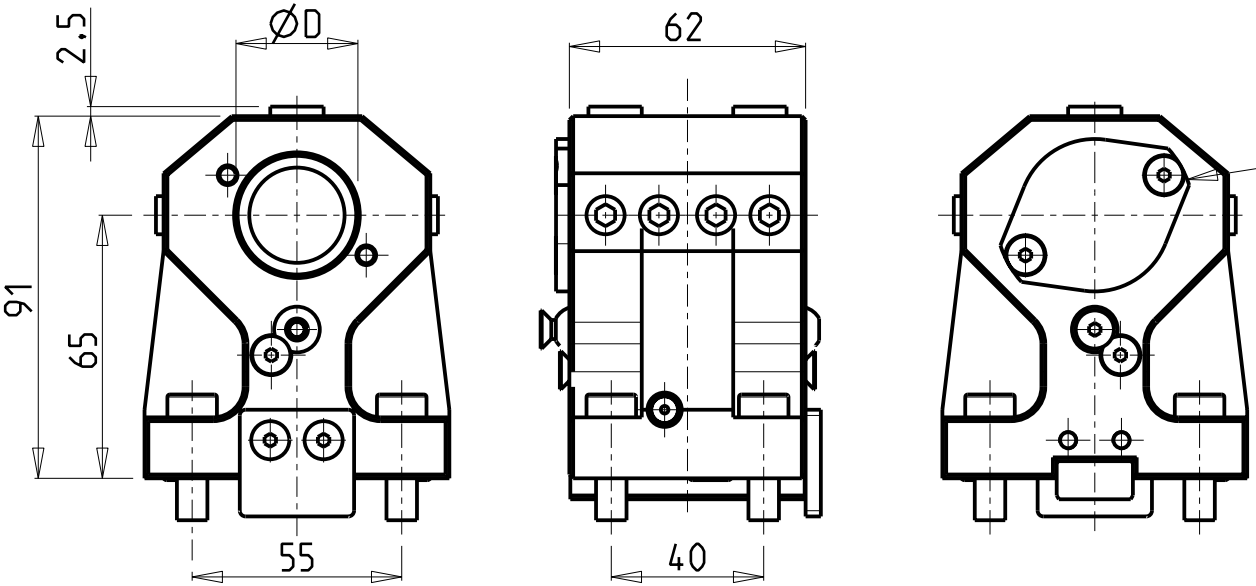

KIT ADDUZIONE INTERNA (OPZIONALE)
KIT FOR INTERNAL COOLANT (OPTIONAL)
KIT FUER INTERNE KUEHLMITTELZUFUHR (OPTIONAL)
Ø32 cod. KIT1000001

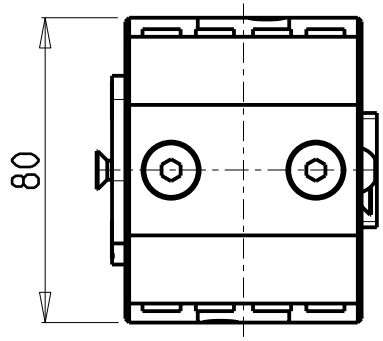

PER BOCCOLE DI RIDUZIONE VEDI PAG. TBL150-1-00
FOR REDUCING BUSHINGS SEE PAGE TBL150-1-00
FUR REDUZIERBUCHSE SIEHE SEITE TBL150-1-00

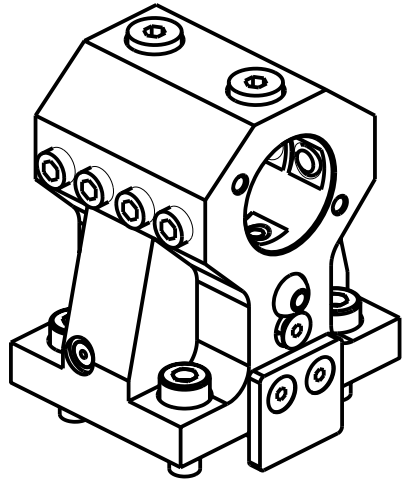

Cod. MT	N°Utensili N°Tools N°Werkzeuge	Reversibile lato mandrino/contromandrino Reversible sub/main spindle side Umkehrbare Spindelseite/ Gegenspindelseite	Lubrificazione int. opzionale Coolant through optional Innenkuehlung Optional	Lubrificazione est. Ext. coolant Aussenkuehlung	Misure Dimensions Masse	D
NKM1993200	1	X	X	X	mm	32

CMZ
MOD: TTS 38 - TTS 46 - TTS 52 - TTS 66

PORTAUTENSILE ASSIALE PER BARENO Ø32mm H=65mm
Axial single boring bar holder Ø32mm H=65mm
Axial Bohrhalter Ø32mm H=65mm

M.T. srl
Via Casino Albini 480
Tel. 0541/956034-957884
Fax 0541/956341
47842 S. GIOVANNI IN M. (RN)
e-mail: mtma@mtmarchetti.com
http://www.mtmarchetti.com

Subject to change without notice.

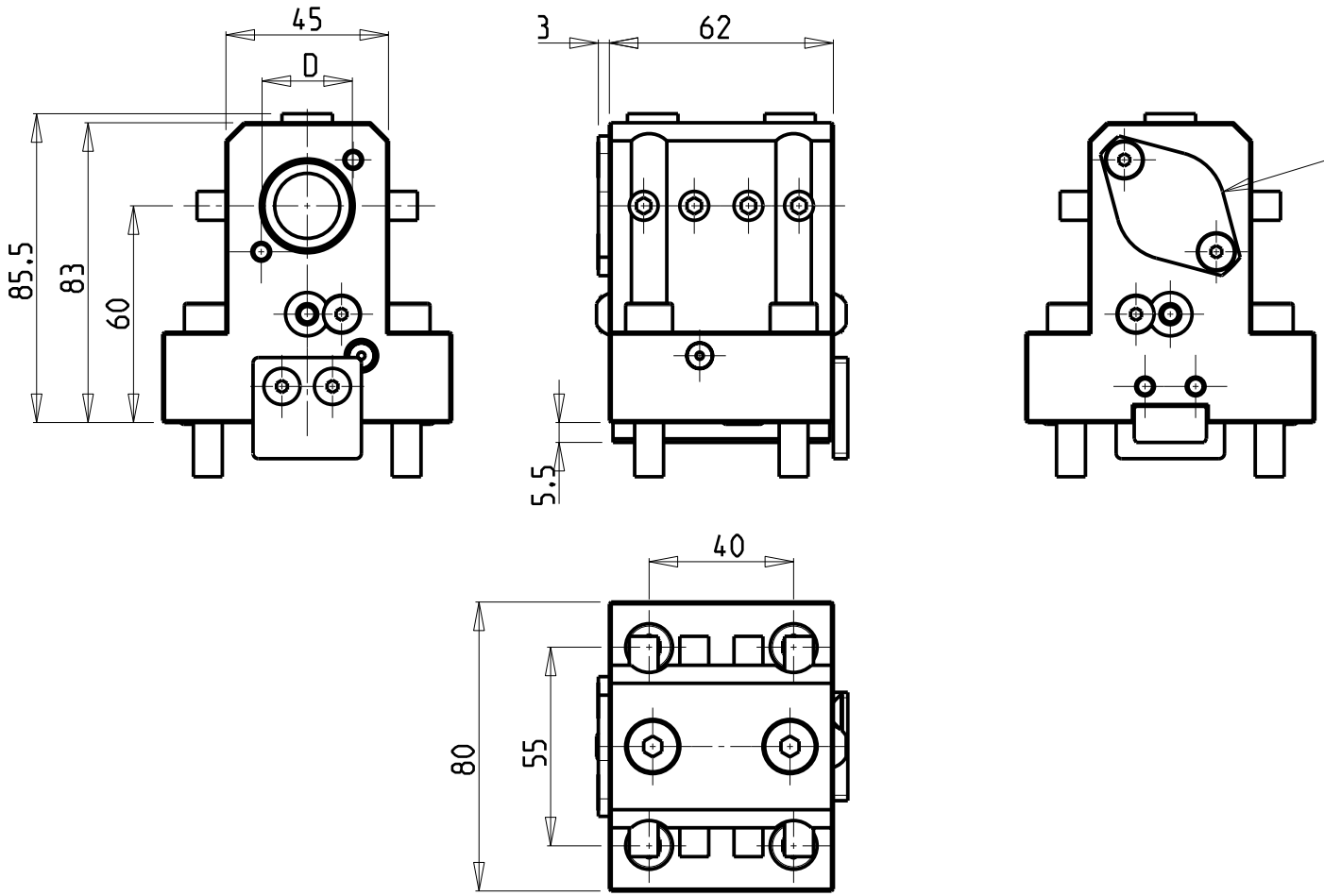

KIT ADDUZIONE INTERNA (OPZIONALE)
KIT FOR INTERNAL COOLANT (OPTIONAL)
KIT FUER INTERNE KUEHLMITTELZUFUHR (OPTIONAL)
Ø25-Ø1" cod. KIT1000006

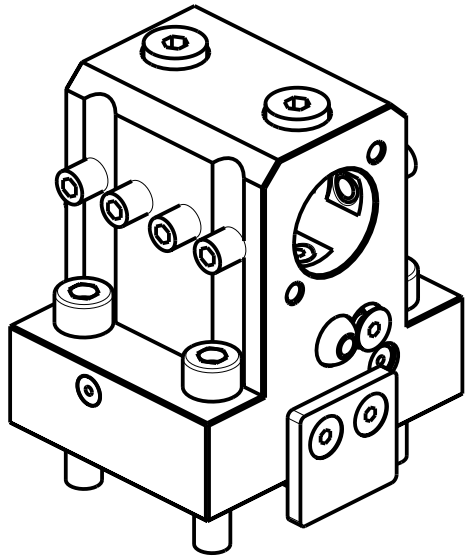

Cod. MT	N°Utensili N°Tools N°Werkzeuge	Reversibile lato mandrino/contromandrino Reversible sub/main spindle side Umkehrbare Spindelseite/ Gegenspindelseite	Lubrificazione int. opzionale Coolant through optional Innenkuehlung Optional	Lubrificazione est. Ext. coolant Aussenkuehlung	Misure Dimensions Masse	D
NKM0112540	1	X	X	X	mm	25

CMZ

MOD: TTS 38 - TTS 46 - TTS 52 - TTS 66

PORTAUTENSILE ASSIALE PER BARENO Ø25mm H=60mm
Axial single boring bar holder Ø25mm H=60mm
Axial Bohrhalter Ø25mm H=60mm

M.T. srl
Via Casino Albini 480
Tel. 0541/956034-957884
Fax 0541/956341
47842 S. GIOVANNI IN M. (RN)
e-mail: mtma@mtmarchetti.com
http://www.mtmarchetti.com

Subject to change without notice.

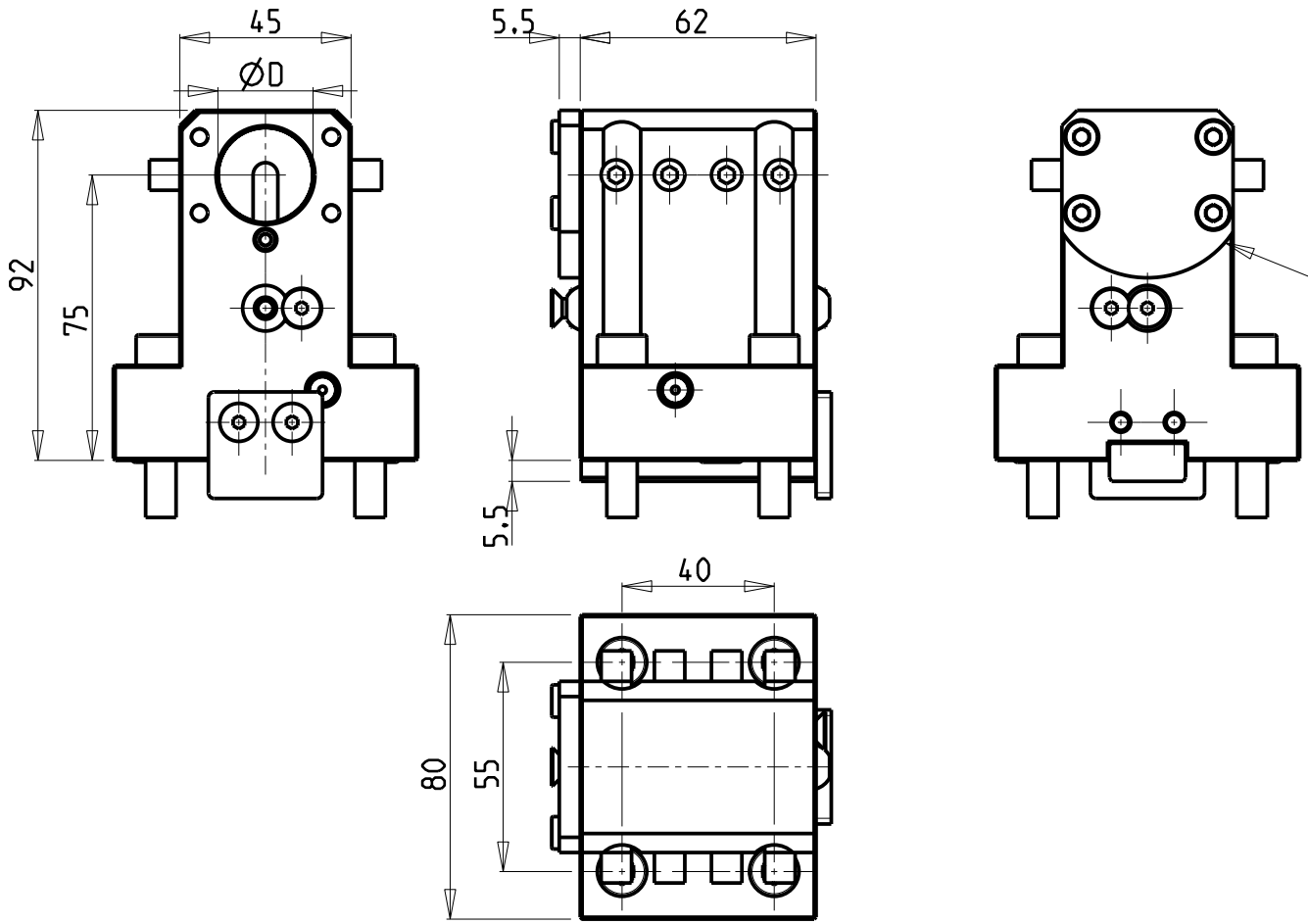

KIT ADDUZIONE INTERNA (OPZIONALE)
KIT FOR INTERNAL COOLANT (OPTIONAL)
KIT FUER INTERNE KUEHLMITTELZUFUHR (OPTIONAL)
Ø25-Ø1" cod. KIT1000017

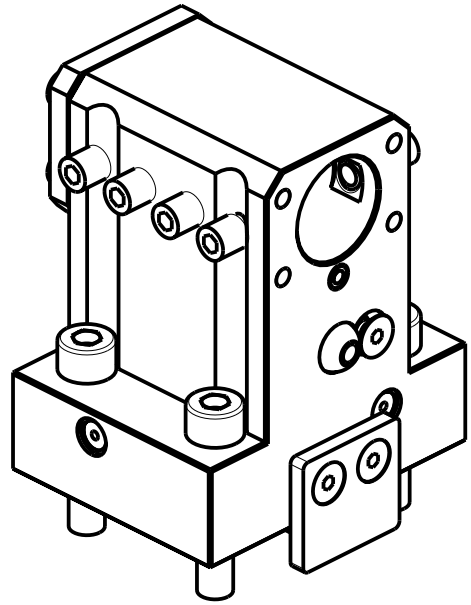

Cod. MT	N°Utensili N°Tools N°Werkzeuge	Reversibile lato mandrino/contromandrino Reversible sub/main spindle side Umkehrbare Spindelseite/ Gegenspindelseite	Lubrificazione int. opzionale Coolant through optional Innenkuehlung Optional	Lubrificazione est. Ext. coolant Aussenkuehlung	Misure Dimensions Masse	D
NKM0112560	1	X	X	X	mm	25

CMZ

MOD: TTS 38 - TTS 46 - TTS 52 - TTS 66

PORTAUTENSILE ASSIALE PER BARENO Ø25mm H=75mm
Axial single boring bar holder Ø25mm H=75mm
Axial Bohrhalter Ø25mm H=75mm

M.T. srl
Via Casino Albini 480
Tel. 0541/956034-957884
Fax 0541/956341
47842 S. GIOVANNI IN M. (RN)
e-mail: mtma@mtmarchetti.com
http://www.mtmarchetti.com

Subject to change without notice.

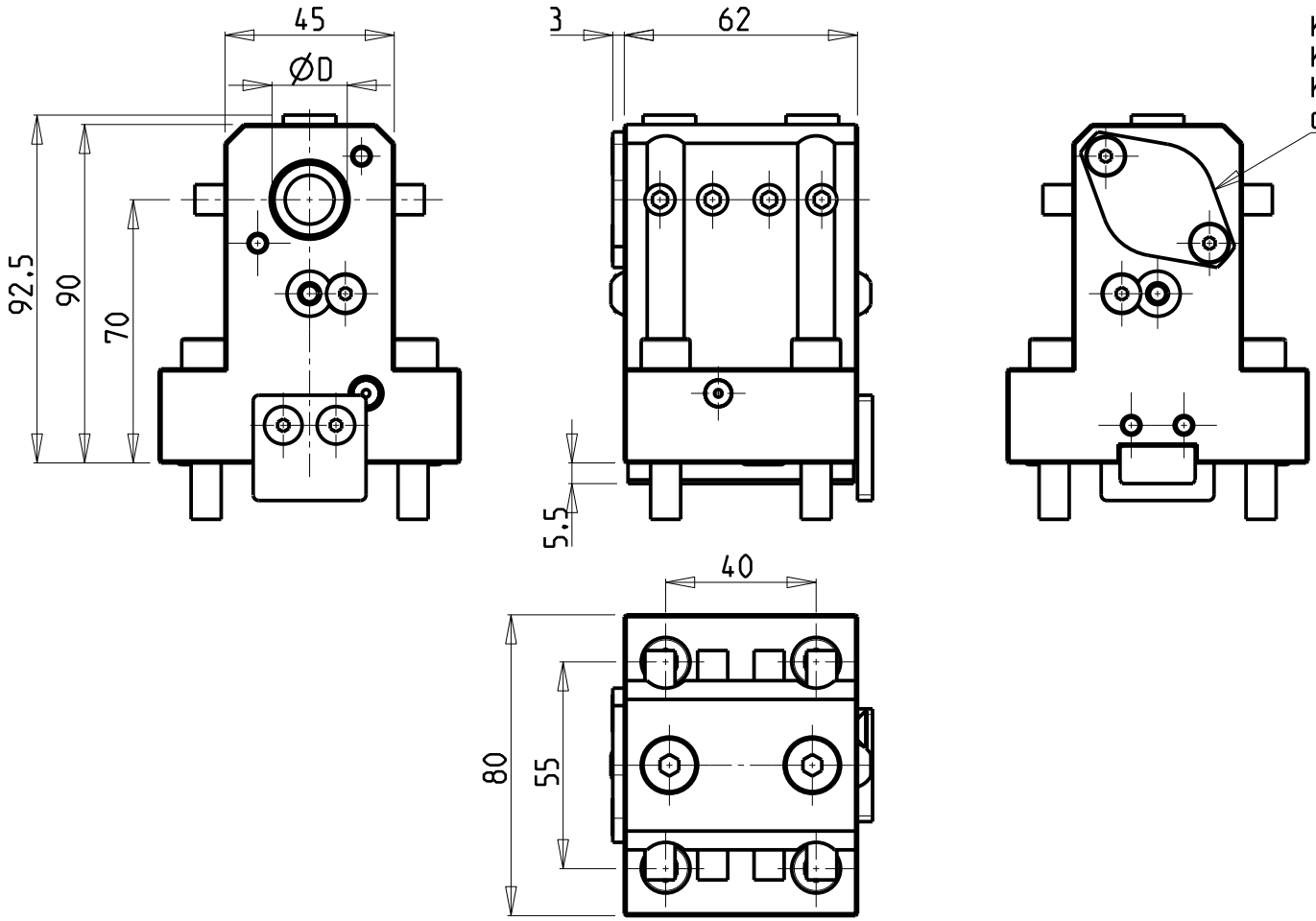

KIT ADDUZIONE INTERNA (OPZIONALE)
KIT FOR INTERNAL COOLANT (OPTIONAL)
KIT FUER INTERNE KUEHLMITTELZUFUHR (OPTIONAL)
cod. KIT1000015

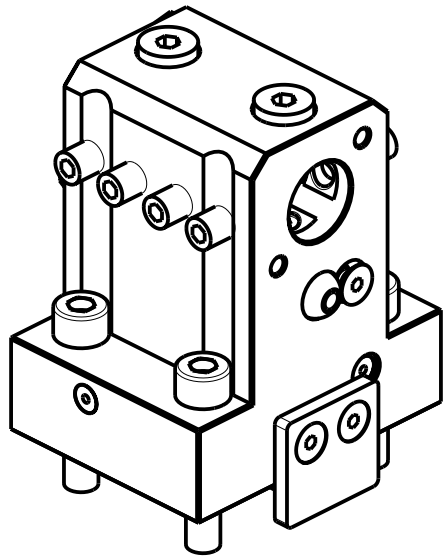

Cod. MT	N°Utensili N°Tools N°Werkzeuge	Reversibile lato mandrino/contromandrino Reversible sub/main spindle side Umkehrbare Spindelseite/ Gegenspindelseite	Lubrificazione int. opzionale Coolant through optional Innenkuehlung Optional	Lubrificazione est. Ext. coolant Aussenkuehlung	Misure Dimensions Masse	D
NKM0112550	1	X	X	X	mm	20

CMZ

MOD: TTS 38 - TTS 46 - TTS 52 - TTS 66

PORTAUTENSILE ASSIALE PER BARENO Ø20mm H=70mm
Axial single boring bar holder Ø20mm H=70mm
Axial Bohrhalter Ø20mm H=70mm

M.T. srl
Via Casino Albini 480
Tel. 0541/956034-957884
Fax 0541/956341
47842 S. GIOVANNI IN M. (RN)
e-mail: mtma@mtmarchetti.com
http://www.mtmarchetti.com

Subject to change without notice.

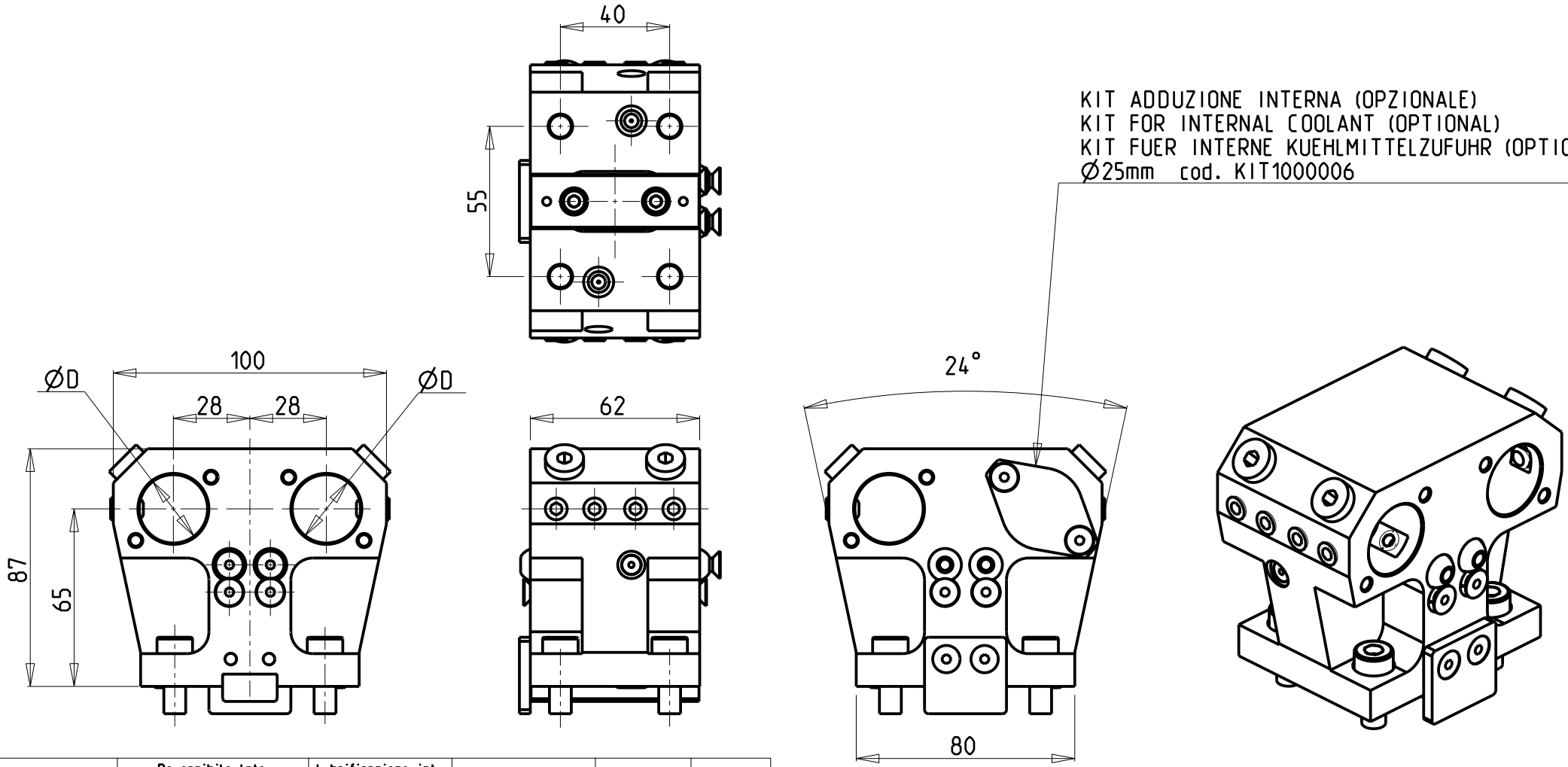

Cod. MT	Reversibile lato mandrino/contromandrino Reversible sub/main spindle side Umkehrbare Spindelseite/ Gegenspindelseite	Lubrificazione int. opzionale Coolant through optional Innenkuehlung Optional	Lubrificazione est. Ext. coolant Aussenkuehlung	Misure Dimensions Masse	D
NKM2002500	X	X	X	mm	25

CMZ

MOD: TTS 38 - TTS 46 - TTS 52 - TTS 66

PORTAUTENSILE ASSIALE PER BARENO 2 POSIZIONI IN Y Ø25mm H=65mm
Axial double boring bar holder 2 positions in Y Ø25mm H=65mm
Axial Bohrhalter 2 Positionen in Y Ø25mm H=65mm

M.T. srl
Via Casino Albini 480
Tel. 0541/956034-957884
Fax 0541/956341
47842 S. GIOVANNI IN M. (RN)
e-mail: mtma@mtmarchetti.com
http://www.mtmarchetti.com

Subject to change without notice.

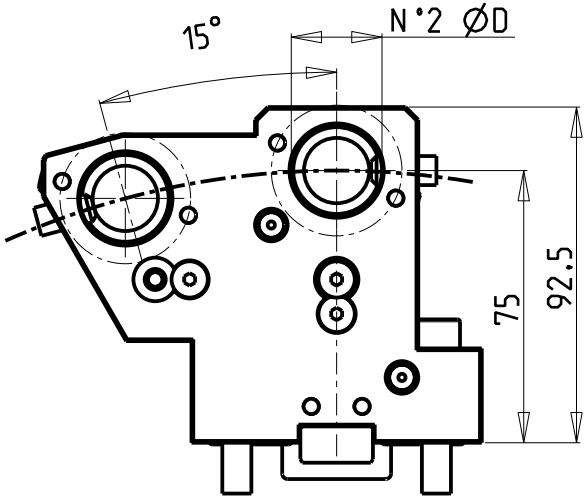

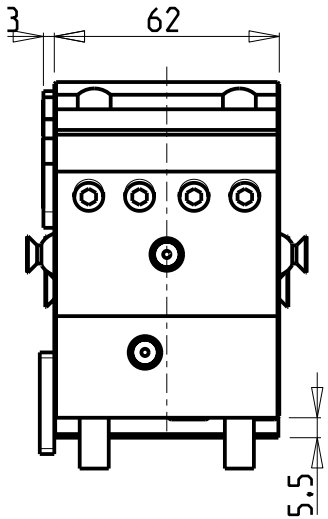

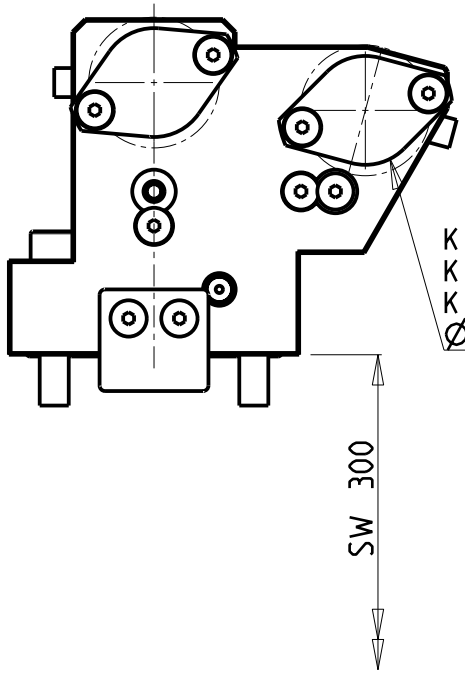

KIT ADDUZIONE INTERNA (OPZIONALE)
KIT FOR INTERNAL COOLANT (OPTIONAL)
KIT FUER INTERNE KUEHLMITTELZUFUHR (OPTIONAL)
Ø25-Ø1" cod. KIT1000006

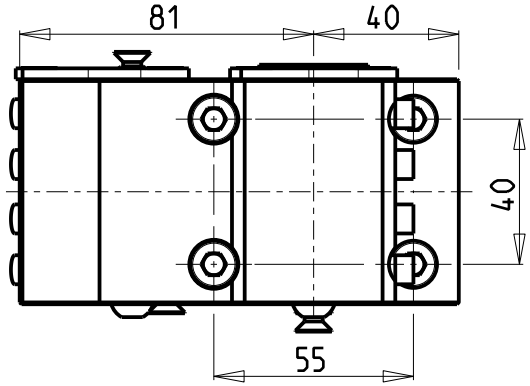

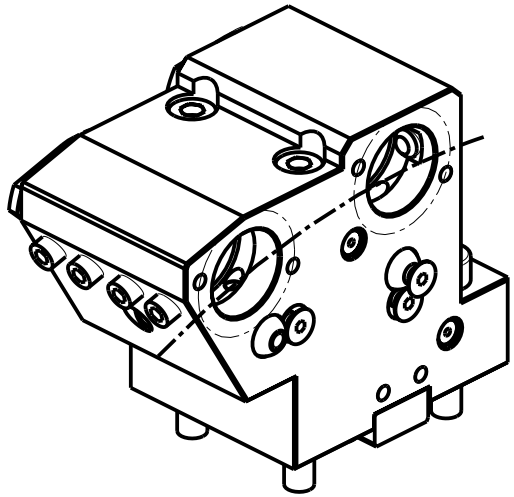

PER BOCCOLE DI RIDUZIONE VEDI PAG. TBL150-1-00
FOR REDUCING BUSHINGS SEE PAGE TBL150-1-00
FUR REDUZIERBUCHSE SIEHE SEITE TBL150-1-00

Cod. MT	Cod. NAKAMURA	N°Utensili N°Tools N°Werkzeuge	Lubrificazione int. opzionale Coolant through optional Innenkuehlung Optional	Lubrificazione est. Ext. coolant Aussenkuehlung	Misure Dimensions Masse	D
NKM0462500	C22413	2	X	X	mm	25

CMZ

MOD: TTS 38 - TTS 46 - TTS 52 - TTS 66

PORTAUTENSILE ASSIALE PER BARENO 2 POSIZIONI Ø25mm
Axial 2 position upright boring bar holder Ø25mm
Axial Bohrhalter 2 Positionen Ø25mm

M.T. srl
Via Casino Albini 480
Tel. 0541/956034-957884
Fax 0541/956341
47842 S. GIOVANNI IN M. (RN)
e-mail: mtma@mtmarchetti.com
http://www.mtmarchetti.com

Subject to change without notice.

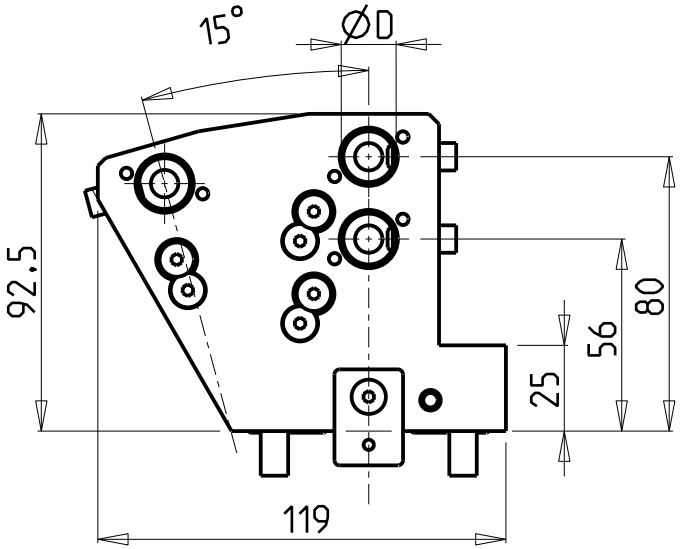

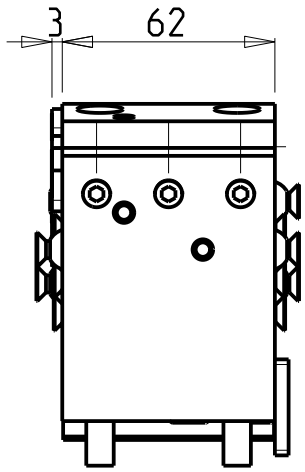

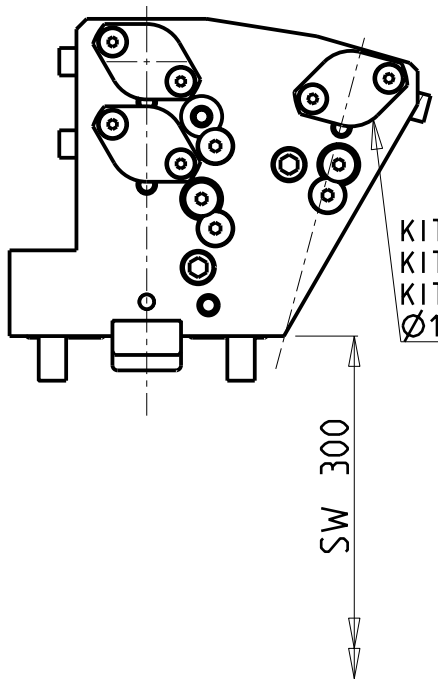

KIT ADDUZIONE INTERNA (OPZIONALE)
KIT FOR INTERNAL COOLANT (OPTIONAL)
KIT FUER INTERNE KUEHLMITTELZUFUHR (OPTIONAL)
Ø16-Ø5/8" cod. KIT1000030

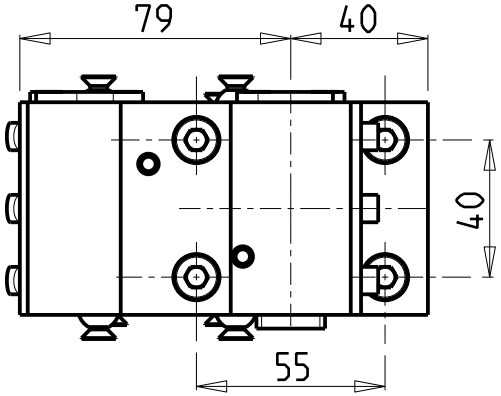

PER BOCCOLE DI RIDUZIONE VEDI PAG. TBL150-1-00
FOR REDUCING BUSHINGS SEE PAGE TBL150-1-00
FUR REDUZIERBUCHSE SIEHE SEITE TBL150-1-00

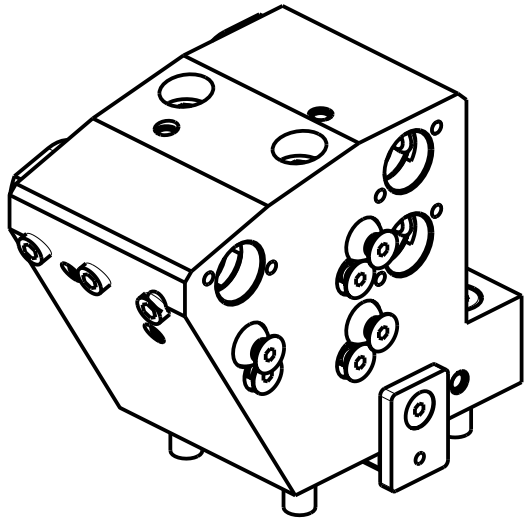

Cod. MT	N°Utensili N°Tools N°Werkzeuge	Lubrificazione int. opzionale Coolant through optional Innenkuehlung Optional	Lubrificazione est. Ext. coolant Aussenkuehlung	Misure Dimensions Masse	D
NKM1041600	3	X	X	mm	16

CMZ

MOD: TTS 38 - TTS 46 - TTS 52 - TTS 66

PORTAUTENSILE ASSIALE PER BARENO 3 POSIZIONI Ø16mm
Axial 3 position upright boring bar holder Ø16mm
Axial Bohrhalter 3 Positionen Ø16mm

M.T. srl
Via Casino Albini 480
Tel. 0541/956034-957884
Fax 0541/956341
47842 S. GIOVANNI IN M. (RN)
e-mail: mtma@mtmarchetti.com
http://www.mtmarchetti.com

Subject to change without notice.